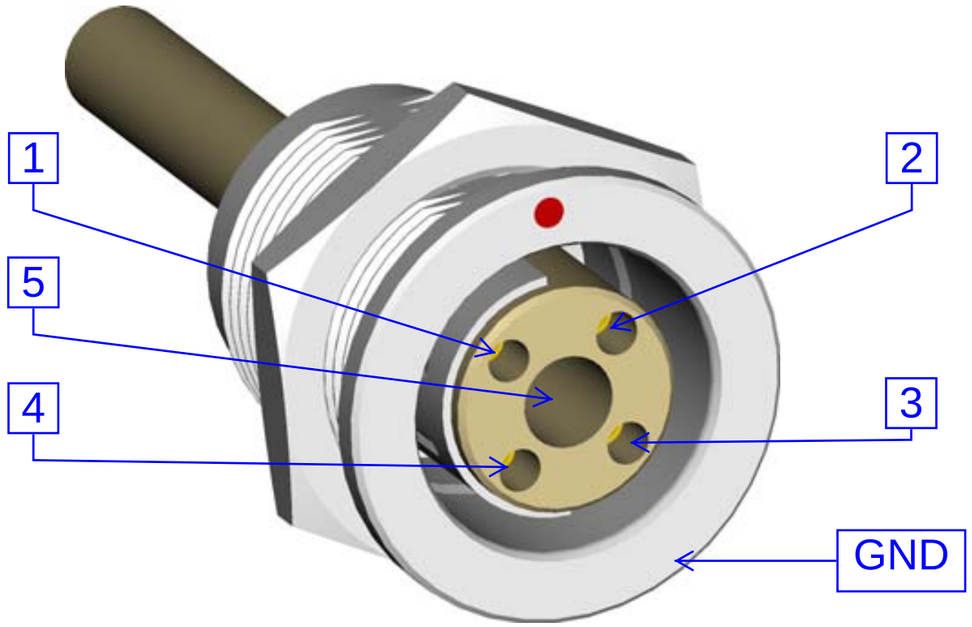

Pin #	Function
1	Safety Interlock
2	Safety Interlock
3	GND
4	GND
5	High Voltage

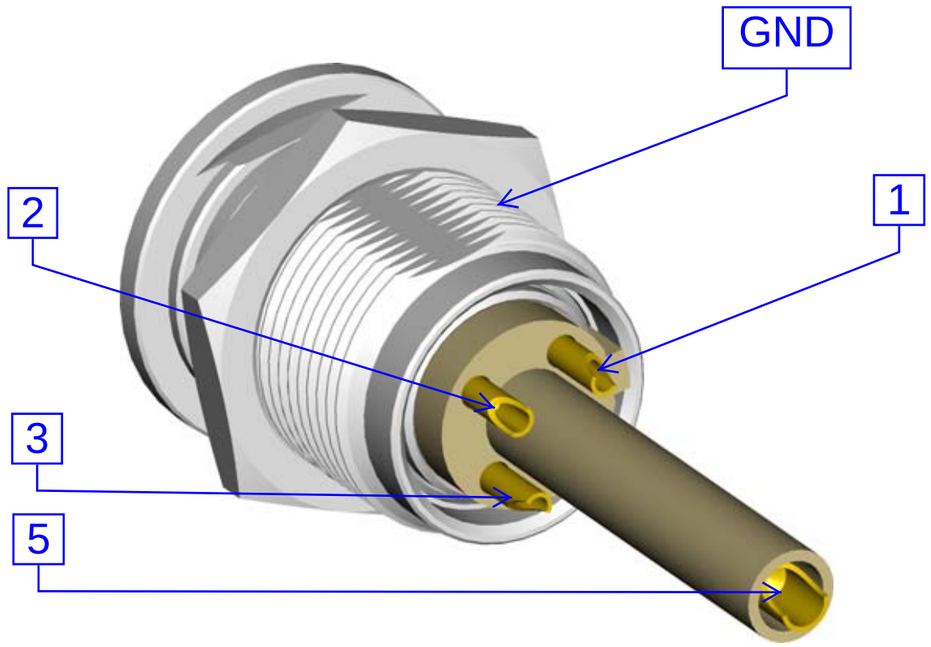

On the klystron side Pin 1 and Pin 2 need to be shorted together and isolated from the ground.

Fischer Connectors
D 105 A036-7
Pin out designation for ESS
klystron ion-pump power supply

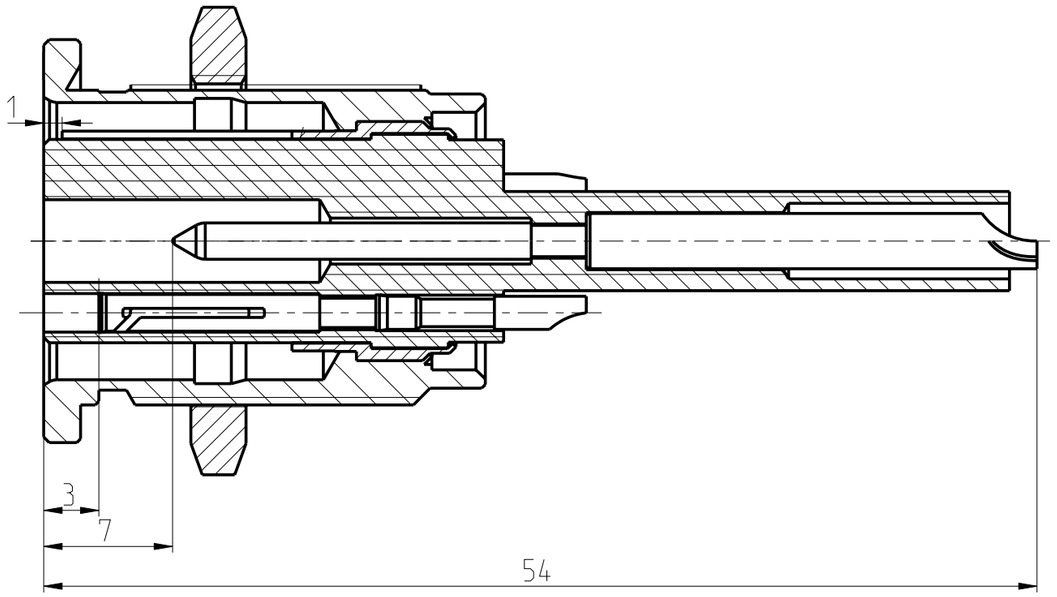

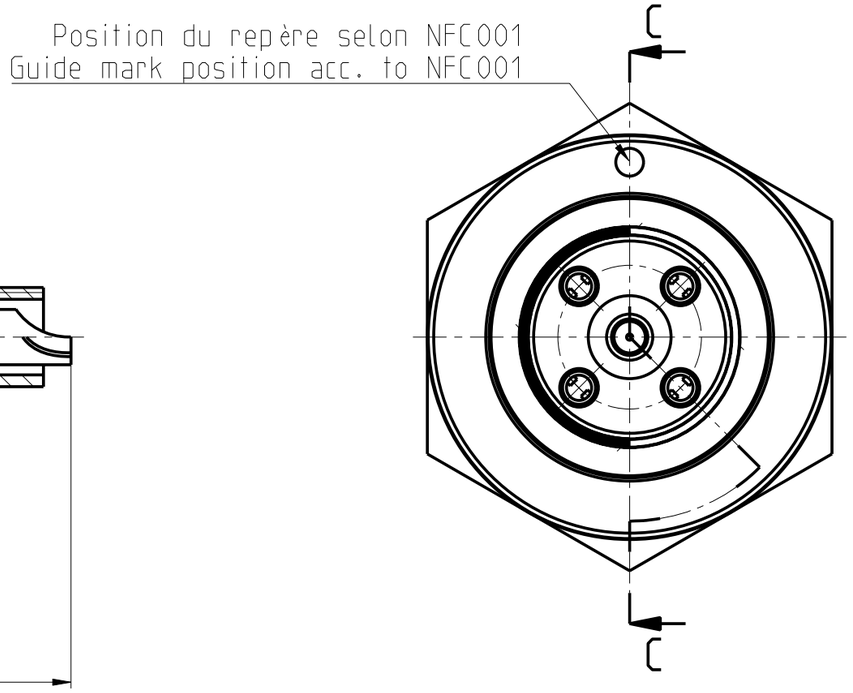

COUPE C-C

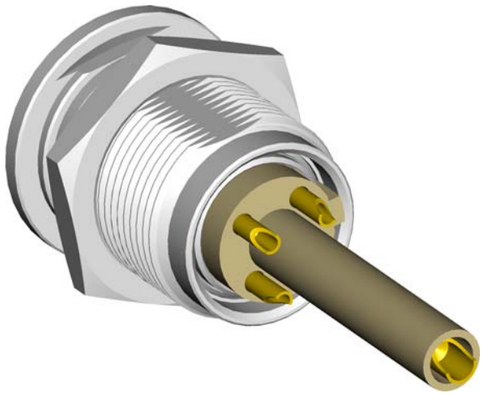

ECHELLE 2:1

Phase: SERIE

EMBASE D	Echelle : 3:1	Note : -				Rév : 2
		Remplace :	Dessiné	18-Jun-08	HA	
		Modif. : 10323	Contrôlé	20-Jun-08	CS	
Fischer Connectors SA, Case postale, CH - 1143 Apples		A3	Code Article : 104114	Désignation : D 105 A036-7		

CONFIDENTIEL - CE PLAN EST NOTRE PROPRIETE ET NE PEUT ETRE DIFFUSE SANS NOTRE CONSENTEMENT
CONFIDENTIAL - THIS PLAN IS OUR PROPERTY AND CANNOT BE DIFFUSE WITHOUT OUR CONSENT

RECEPTACLES

PANEL
MOUNTED

D
BODY STYLE

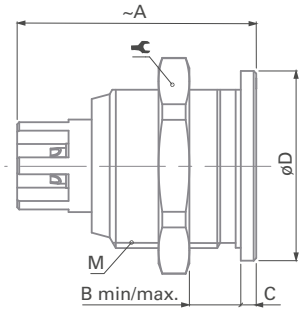

Types	A	B max.	C	D	M		Torque [Nm]
104 A/Z **083**	31	10.5	2.2	19	15x1	17	4.0
105 A **112**	34	15.0	2.0	22	18x1	22	6.0

D
BODY STYLE

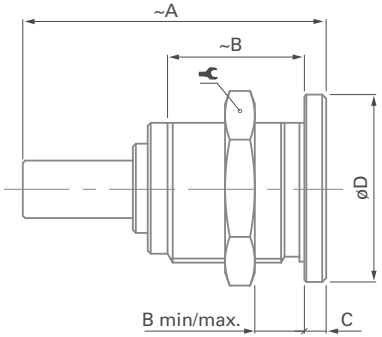

Types	A	B max.	C	D	M		Torque [Nm]
105 A **020**[1]	54	15	2	22	18x1	22	6.0
105 A **036**	54	15	2	22	18x1	22	6.0
105 A **060**[1]	58	15	2	22	18x1	22	6.0
106 A **014**[2]	49	18	3	37	32x1	TX00.106	15

[1] **105 Series**
The high voltage center contact is retained in a special insulator. To achieve proper high voltage performance, the window for soldering of the wire has to be covered by the supplied insulating tube, which must be placed over the cable before soldering.

[2] The D 106 A014 is supplied with a slotted nut.
The required hook spanner TX00.106 is shown on page B 9-2.
For insertion of male high voltage contacts which have to be assembled after wiring, we recommend tool TP00.001, shown on page J 5.

Torque *[Nm]* are recommended values that may be influenced by the quality of the panel surface. Tests must be conducted to evaluate the exact values.

All dimensions and images shown are in millimeters and are for reference only.

FOR 104, 105 & 106 SERIES

● = Standard ❍ = Option

Reference	Pin layout	Number of contacts		Contact type		Insulating material	Contact ø [2] [mm]	Wire barrel ø [mm]	Test voltage[6] [kV] in mated position				Current rating [1] [A]
									AC r.m.s		DC		
				Solder	Crimp				Contact to body	Contact to contact	Contact to body	Contact to contact	
104 A/Z **083**[5]		3	2 HT	●		PTFE	0.9	0.8	4.0	4.0	6.0	6.0	8.0
			1	●			1.6	1.8	2.2	4.5	3.5	6.5	18
105 A **020**[3]		3	1 HT	●		PTFE	2.0	2.0	6.0	6.0	14	14	20
			2	●			1.3	1.1	1.8	3.8	2.5	5.0	12
105 A **036**[3]		5	1 HT	●		PEEK	2.0	2.0	6.0	6.0	14	14	18
			4	●			1.3	1.1	1.8	2.0	2.5	3.0	12
105 A **060**[3]		8	1 HT	●		PTFE	2.0	2.0	6.0	6.0	14	14	16
			7	●			1.3	1.1	1.8	1.6	3.0	2.8	10
105 A **112**[4]		5	4 HT	●		PTFE	1.3	1.2	4.5	4.5	7.0	7.0	11
			1	●			2.0	2.0	2.0	4.5	3.0	7.0	11
106 A **014**[3]		8	2 HT	●		PTFE	2.0	2.4	7.0	15	14	23	16
			6	●			1.3	1.1	2.2	2.6	5.0	4.0	9.0

[1] Recommended max. operating current per contact at 40°C temperature rise measured according to IEC 60512-5-2-5b.
[2] Contact dia 2.0 is positioned to make contact first and break last.
[3] See Tooling section, page B 9-1, for insertion tool of contact dia. 2.0.
[4] HT contacts are female and LV contact is male on plug.
[5] All contacts are male on plug with type A standard polarity.
[6] Measured with S plug and D receptacle.