04. Mechanical analyses

ESS-Bilbao

R. Vivanco, A. Aguilar, J. Aguilar, V. Medina, G. Bakedano, S. Stepanyan, M. Magán, F. Sordo, M. Pérez
A. Andersson, S. Ghatnekar

CDR PBW-PB & Vessel - 04 July 2019, Lund (ESS)

Table of contents

Load scenarios, requirements and materials

Mechanical analyses

Design and operating pressures and Temperatures

- **Pressure:**
  - PD= Vacuum / ~~2 bar(g)~~ 1 bar(g)
  - PO= Vacuum
  - PM= 0 bar(g)
- **Temperature:**
  - TD= 80ºC
  - TO=50ºC
  - TM=35ºC

ESS-109482 Change of design pressure of Monolith Vessel. (May 2019)

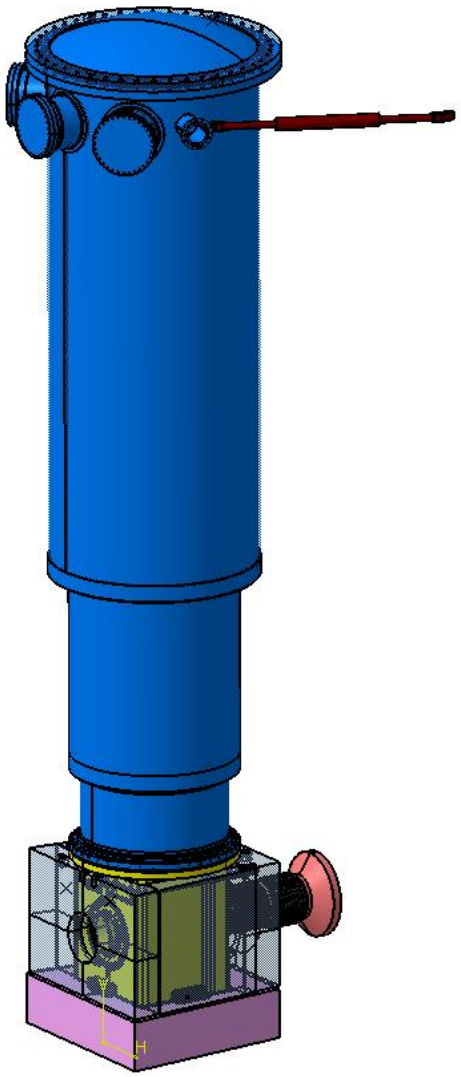

Mechanical analyses

Load Combinations

- ESS-0135130 KFM

Load scenarios

- Analyzed: D01, D04, D05, D07, D09, D11.
- Additionally: Hidrostatic test (PT)

5.4. Load combinations system part D

Combination	Rule for combination	Event class	Criteria level	Remarks
D01	(PD+TD+DW)	SF1	A	
D02	(PO+TO+DW+SF1_NL)	SF1	A	
D03	(PO+TO+DW+SF2_NL)	SF2	A	
D04	(PO+TO+DW+SF2_NL) + SF2_EQ	SF2	A	
D05	(PM+TM+DW) +SF2_ML	SF2	A	
D06	(PO+TO+DW+SF3_NL) + SF3_TB	SF3	C	
D07	(PO+TO+DW+ SF3_NL) +SF3_EQ + SF3_TB	SF3	C	
D08	(PO+TO+DW+ SF4_NL)	SF4	D	
D09	(PO+TO+DW+ SF4_NL) +SF4_EQ	SF4	D	

Table 11. Load combinations for system part D

Mechanical analyses

Loads considered

- DW:
  - Weight of all components.
  - Shielding blocks of PBW System.
  - Half of the weight of Drift pipe.
- Maintenance Loads:
  - Checking if 10t RH cask can be placed over the PBW-Vessel.
- Confinement release:
  - 2 bar(g) overpressure
- Nozzle loads:
  - 5 feedthorughs:
    - 2 load free: vacuum
    - 3 cabling and piping. Pipes connected to blank flange, only weight is considered (max diam=25mm<<DN250).
- Temperature:
  - Reduced radiation levels: no secondary stress need to be checked (Materials Guide).
  - Only material properties affected.
- Pressure (force) from PBW Pneumatic Seals.
- Cooling circuit:
  - PD=5 bar
  - PT=1.43 * 5 bar

Mechanical analyses

Loads considered

- Seismic loads:
  - H2 (SF2), H3 (SF3), H4 (SF4)

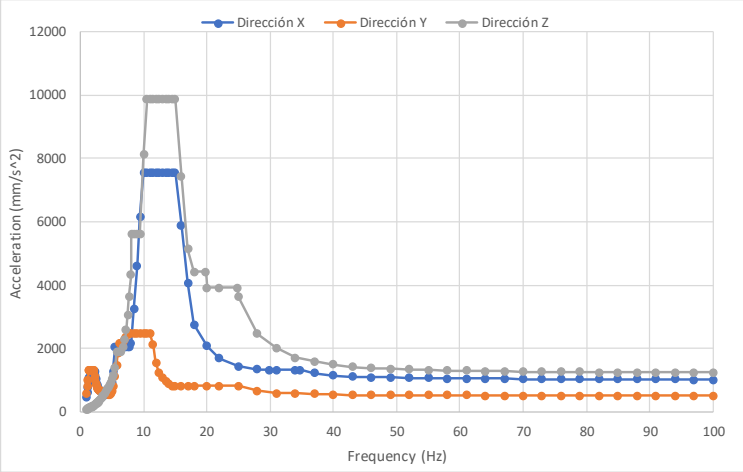

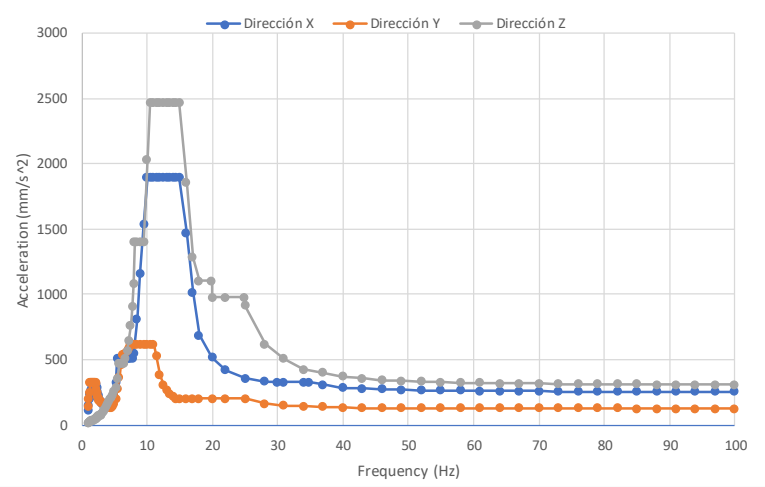

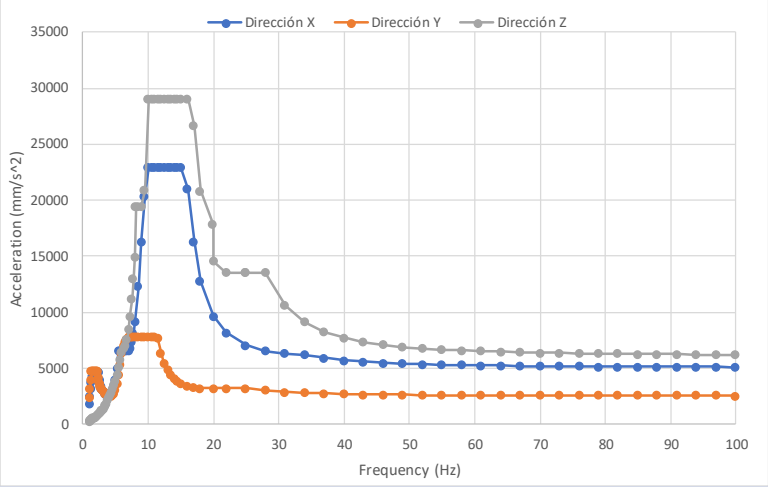

Mechanical analyses

Special functional requirements

- Pressure from PBW Seals

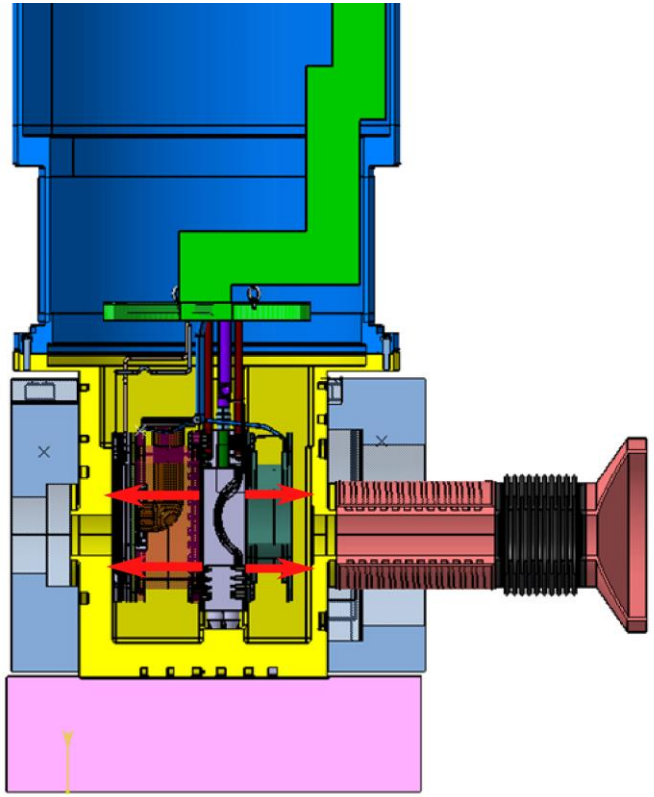

Mechanical analyses

Materials

- PB, Vessel, flanges, bellow, rigid struts and pipes:
  - SS316L: X2CrNiMo17 12-2 according to A3.3S RCC-MRx Appendix 03.
- Bolts:
  - 25CrMo4 (changed acc. to manufacturer)→ 42CrMo4 according to A3.11S RCC-MRx Appendix 03.
- Gaskets:
  - EPDM gaskets: 5 feedthroughs, 1 PBW-vessel to vessel cap. REMOVABLE
  - Spring energized (Helicoflex): 1 PB to PBW-Vessel. Properties from manufacturer. PERMANENT

Analysis by analytical formulae

Mechanical analyses

Applicable design rules

- Thickness of shells subject to pressure: according to RD 3332
- Openings and their reinforcements: according to RD 3333
- Evaluation of stress limits for primary loads: according to RD 3354 and RD 3355
- Consideration of buckling: according to RD 3370
- Bolted assemblies: according to RD 3380 (bolted flanges designed following the rules of Appendix A6).
- Analysis of bellows: according to RB 3700 for single ply bellows.

Analysis Procedure

- 2 step analysis:
  - First, design rules used to check and modify minimum thickness.
  - FEM evaluation to check mechanical stresses under code limits, and displacements.

Mechanical analyses

Thickness against internal pressure

- RD 3332.2 Subsection D and RB 3332.3 Subsection B

Element (ID 4)	Nominal Diameter	Class	Section	P (bar)	T (° C)	D_i (ID 2) (mm)	S (MPa)	h_r (mm)	h_n (ID 2) (mm)
$Wall\|_{PBW\text{-}Vessel}$	–	$N3_{RX}$	RD 3332.2	2	80	1010	120	0.8425(*)	7 (in 3D model) / 10 (thickness considered in the calculations)
						810		0.6757	
						700		0.5839	
$Nozzles\|_{PBW\text{-}Vessel}$	DN100CF (X48)			2	80	104	120	0.0868	5
	DN250CF (X49)					250		0.2085	7
	DN250CF (X50)					250		0.2085	7
	DN250CF (X51)					250		0.2085	7
	DN40CF (X52)					37		0.0309	5
$Wall\|_{PBW\text{-}PB}$	–	$N1_{RX}$	RB 3332.3	2	80	l = 475	120	13.7121	27
						l = 125		3.6084	10
$Lid\|cooling\ circuit\ (_{PBW\text{-}PB})$	–			6	35±2	l = 22	122	1.2197	2

Mechanical analyses

Thickness against external pressure

- Appendix A12

Element	D_e (ID 2) (mm)	T (ID 2) (mm)	L (ID 2) (mm)	D_e/T	L/D_e	A	B (bar)	P_{ad} (bar)	P (bar)
$Wall\|_{PBW\text{-}Vessel}$	1030	10	2503	1030/10	2503/1030	0.00058	55.2	7.1	1
	830	10	985	830/10	985/830	0.00190	81.7	13.7	1
	720	10	348	720/10	348/720	0.00480	85.1	22.3	1
$Nozzles\|_{PBW\text{-}Vessel}$	(X48): 108	5 / 2	(X48): 156	108/2	156/108	0.0038	84.2	27.3	1
	(X49): 256	7 / 3	(X49): 199	256/3	199/256	0.0023	82.4	14.3	1
	(X50): 256	7 / 3	(X50): 199	256/3	199/256	0.0023	82.4	14.3	1
	(X51): 256	7 / 3	(X51): 199	256/3	199/256	0.0023	82.4	14.3	1
	(X52): 40	5 / 1,5	(X52): 103	40/1.5	103/40	0.0034	83.8	53.1	1
							Margin:	Level A / C / D > 2.8	

Mechanical analyses

Bolted Assemblies

- Appendix A06

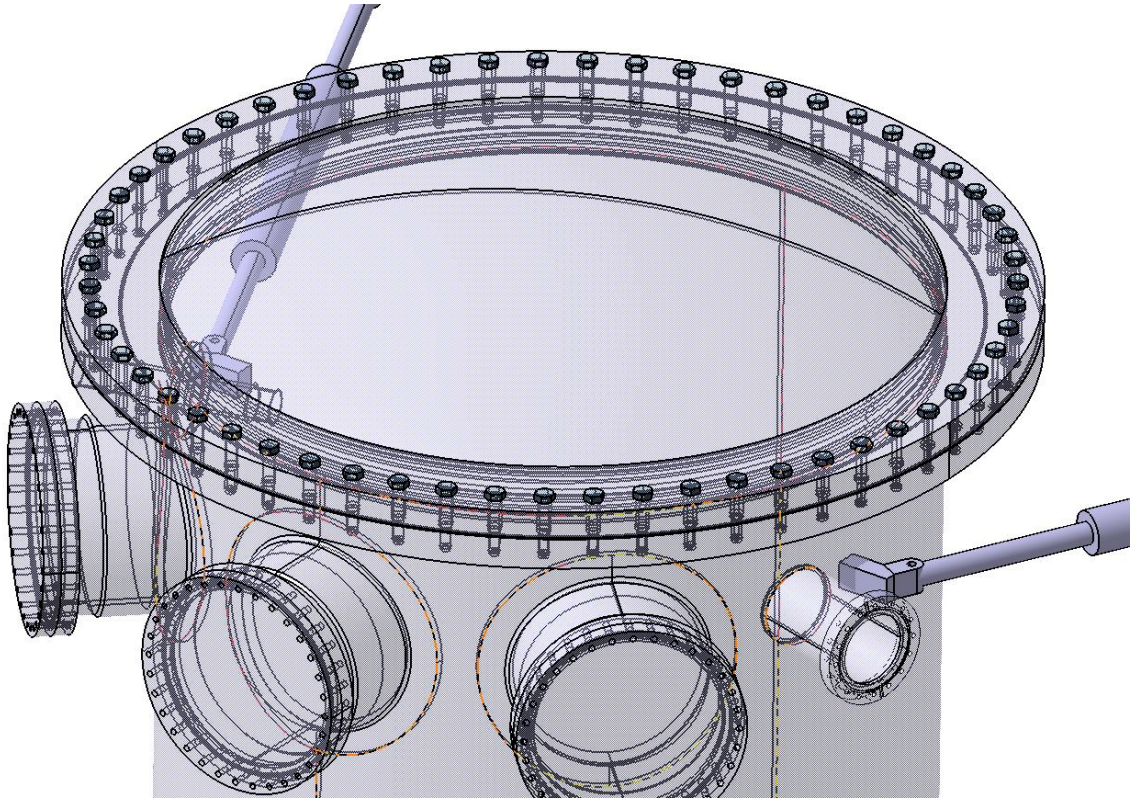

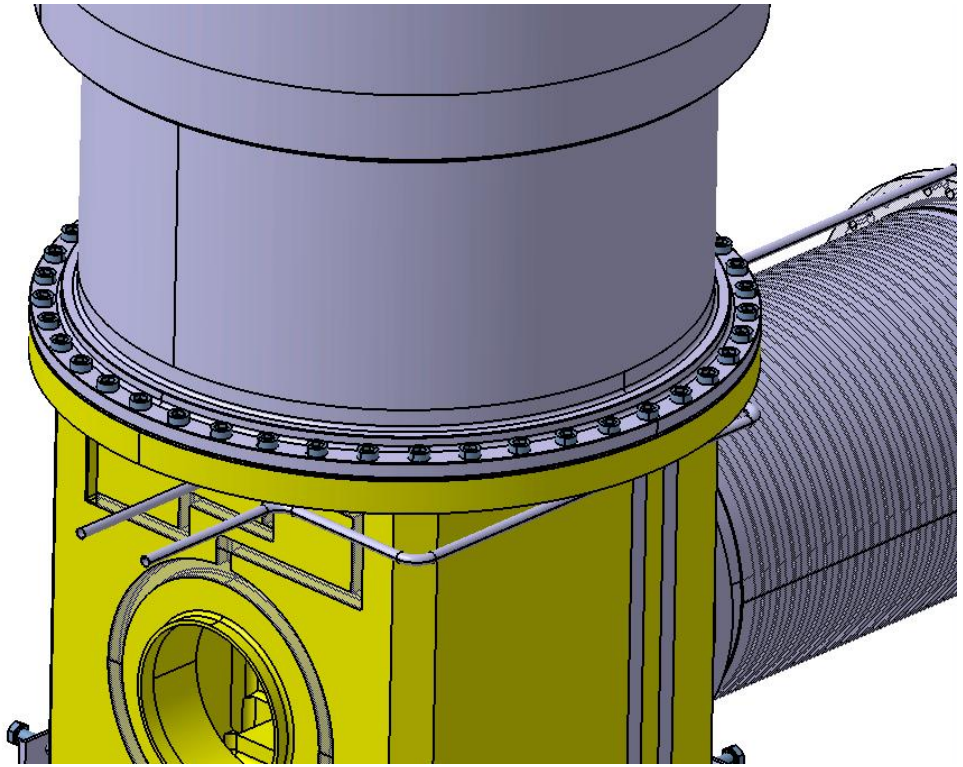

Mechanical analyses

Bolted Assemblies

- Appendix A06

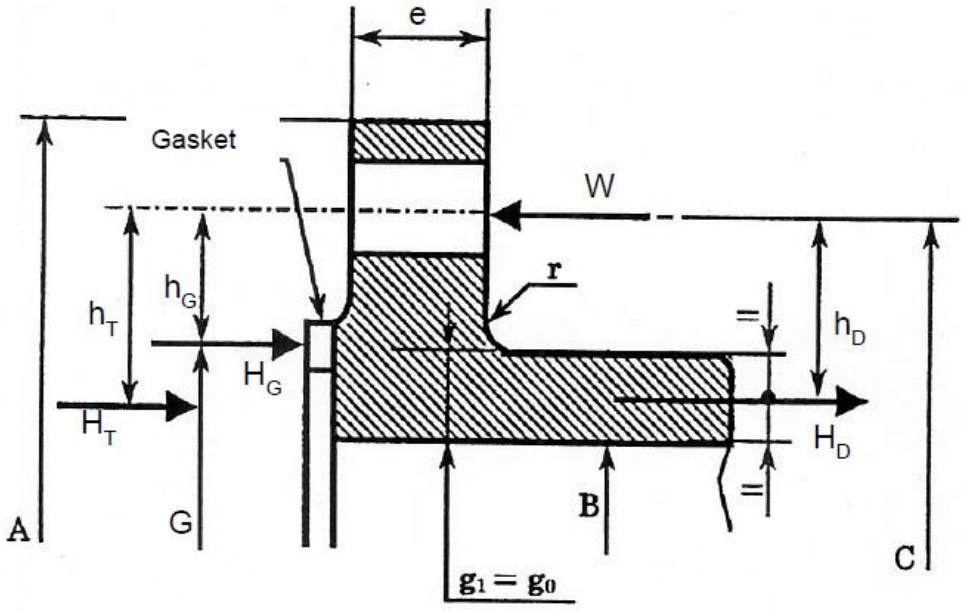

1 : one-piece flanges with the cylindrical shell

Special calculation for Helicoflex gasket

	A.S.M.E. Section VIII Division I	Technetics Group
Operating load	$Wm2 = \pi.b.G.y$	$Fj = \pi.Dj.Y_2$
Hydrostatic force	$H = \pi.\frac{G^2}{4}.P$	$F_F = \pi.\frac{(Dj)^2}{4}.P$
Minimum service load	$H_P = 2.b.\pi.G.m.P$	$Fm = \pi.Dj.Ym$ $Ym = \begin{cases} Ym_1 = Y_1 \\ Ym_2 = Y_2 \frac{P}{Pu\,\Theta} \end{cases}$ Use the greater of the two
Minimum tightening load to apply on bolts	$W = \begin{cases} (1)\ W_{m2} \\ (2)\ H + Hp = W_{m1} \end{cases}$	$F_B = \begin{cases} (1)\ Fj \\ (2)\ F_F + F_m = Fs \end{cases}$
	Use the greater of the two (1) or (2)	Use the greater of the two (1) or (2)

Mechanical analyses

Bolted Assemblies

- Appendix A06

Stress value	Limit [MPa]	PB-Flange [MPa]	Vessel Cap-Flange [MPa]
$M_A=W_A \cdot h_G$ [N·mm]			
kF*σH	1.5S = 180	139,74	2,00
kF*σr	S = 120	29,05	0,13
kF*σθ	S = 120	22,41	0,47
kF*(σH+σr)/2	S = 120	84,39	1,07
kF*(σH+σθ)/2	S = 120	81,08	1,24
Mop ($H_{G,min}$) [N·mm]			
kF*σH	1.5S = 180	43,32	51,16
kF*σr	S = 120	9,00	3,39
kF*σθ	S = 120	6,95	11,96
kF*(σH+σr)/2	S = 120	26,16	27,28
kF*(σH+σθ)/2	S = 120	25,13	31,56
Mop (Wsi) [N·mm]			
kF*σH	1.5S = 180	176,54	135,47
kF*σr	1.5S = 180	36,70	8,99
kF*σθ	1.5S = 180	28,32	31,66
M_A= WSi·h_G [N·mm]			
kF*σH	1.5S = 180	174,16	114,50
kF*σr	1.5S = 180	36,20	7,60
kF*σθ	1.5S = 180	27,93	26,76

Stress value	Limit [MPa]	PB [MPa]	Vessel Cap [MPa]	PB [MPa]	Vessel Cap [MPa]
Mop (Wsi) [N·mm]		P=0,1 MPa		P=0,143 MPa	
kF*σH	180 (A) / 216 (C)	179,36	126,11	178,12	135,68
kF*σr	180 (A) / 216 (C)	37,29	10,78	37,03	11,60
kF*σθ	180 (A) / 216 (C)	28,77	25,14	28,57	27,05
M_A= WSi·h_G [N·mm]		P=0,1 MPa		P=0,143 MPa	
kF*σH	180 (A) / 216 (C)	178,14	113,17	176,39	117,17
kF*σr	180 (A) / 216 (C)	37,03	9,67	36,67	10,02
kF*σθ	180 (A) / 216 (C)	28,57	22,56	28,29	23,36

Mechanical analyses

Dished Head

- Spherically dished head with bolted flanges RC 3332.25 – Thickness check

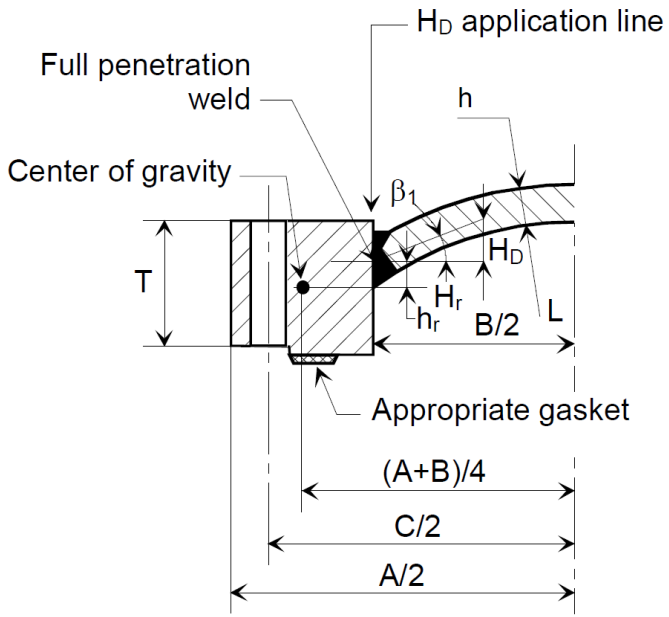

a Progressive transition of welds on each side

$$h \geq 5 \cdot P \cdot L/(6.S)$$

$$H \geq F + \sqrt{F^2 + J}$$

$$F = \frac{P \cdot B \cdot \sqrt{4 \cdot L^2 - B^2}}{8 \cdot S \cdot (A - B)}$$

$$J = \frac{M_O}{S \cdot B} \cdot \left(\frac{A + B}{A - B}\right)$$

Dimension	Value
h [mm]	**1.4 < 5.0 (current)**
Mo [N·mm]	2,015E+07
H_T [N]	**14.841,5**
h_T [mm]	36,5
H_G [N]	**398.550,2**
h_G [mm]	25
H_D [N]	**158.258,5**
h_D [mm]	48
Hr [N]	**136.672,5**
hr [mm]	15
β1 [rad]	0,528423494

$$J = \frac{Mo}{S \cdot B} \cdot \frac{A + B}{A - B} = 1560.9 \text{ mm}$$

$$F = \frac{P \cdot B\sqrt{4L^2 - B^2}}{8S \cdot (A - B)} = 1.491\ mm$$

$$H \geq F + \sqrt{F^2 + J} = 41.0mm$$

Mechanical analyses

Bellow

- General rules for design of bellows in RCC-MRx - RB 3700

Figure RB 3742.12a: single layer bellow with U identical convolutions

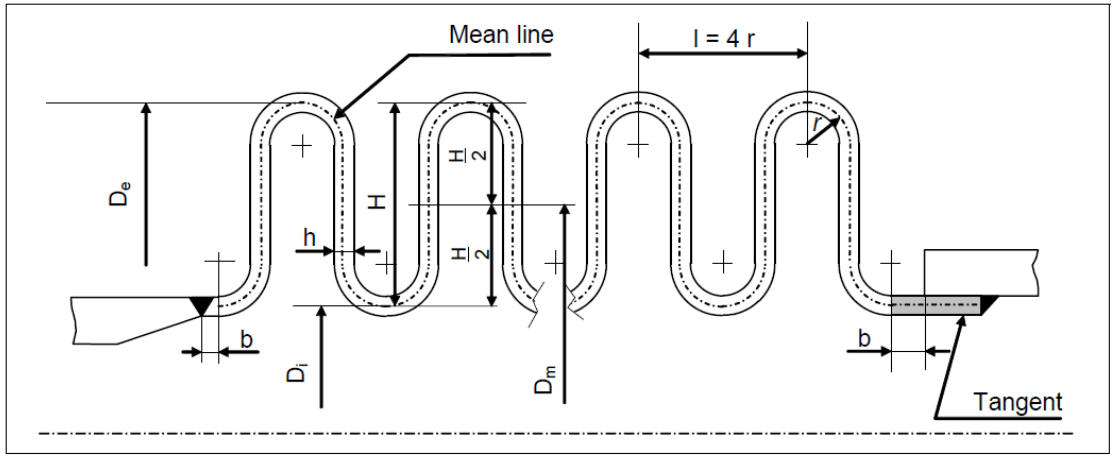

Dimension	Value
h [mm]	0,4
h1 [mm]	0,4
h2 [mm]	0,4
De [mm]	252,9
Di [mm]	220,1
Dm [mm]	236,5
r [mm]	3,95
H [mm]	16,4
b [mm]	3,95
l (4r) [mm]	15,8
L [mm]	16,59
n0	10
Es [Mpa]	193000
poisson rat	0,3
P [Mpa]	0,1
Δl [mm]	2,37
Δx [mm]	6
Δu [mm]	4

Mechanical analyses

Rigid Struts

- Force reactions in each scenario.

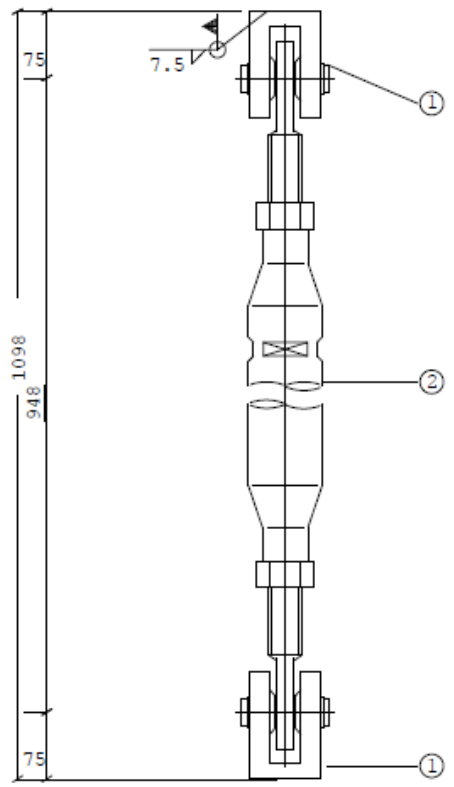

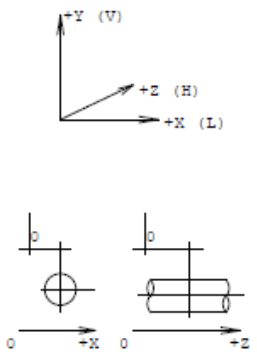

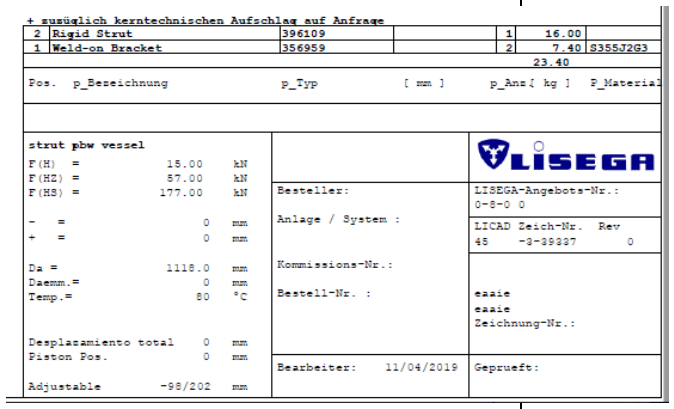

+ zusüglich kerntechnischen Aufschlag auf Anfrage

2	Rigid Strut	396109		1	16.00	
1	Weld-on Bracket	356959		2	7.40	S355J2G3
					23.40	

Pos. p_Bezeichnung p_Typ [mm] p_Anz [kg] P_Material

strut pbw vessel

F(H) =	15.00	kN
F(HZ) =	57.00	kN
F(HS) =	177.00	kN
- =	0	mm
+ =	0	mm
Da =	1118.0	mm
Daemm.=	0	mm
Temp.=	80	°C
Desplazamiento total	0	mm
Piston Pos.	0	mm
Adjustable	-98/202	mm

LISEGA

Besteller:

Anlage / System :

Kommissions-Nr.:

Bestell-Nr. :

Bearbeiter: 11/04/2019

LISEGA-Angebots-Nr.: 0-8-0 0

LICAD Zeich-Nr. Rev 45 -3-39337 0

eaaie
eaaie
Zeichnung-Nr.:

Geprueft:

Part of vessel	Calculated Force Reactions (N)						
	D01	D04	D05	D07	D09	D11	Hydraulic Test
Strut 1	192.9	14925.9	14752.1	409.4	56946.7	176074.3	143.0
Strut 2	5.9	14791.2	14579.5	277.9	56847.7	176014.0	59.9

Mechanical analyses

Feedthroughs

- Feedthroughs dimensioned according to parameters in table.

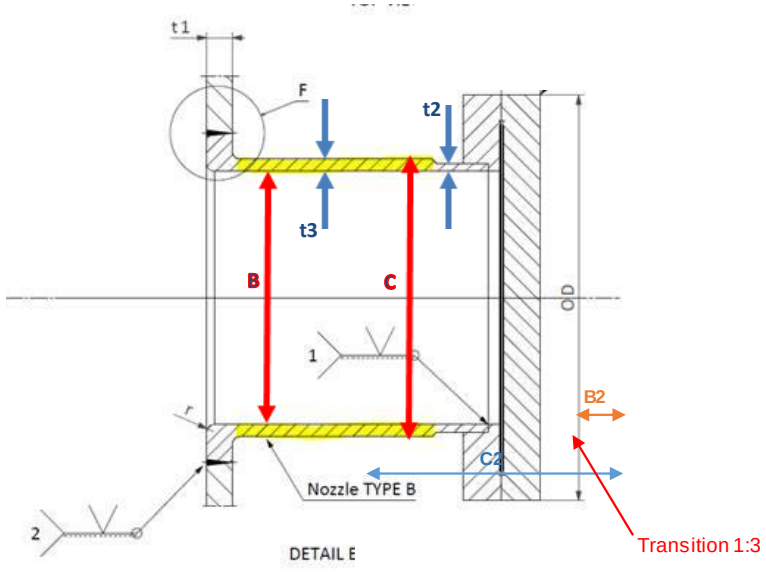

Nozzle	DN	OD (mm)	B (mm)	C (mm)	t2 (mm)	T3 (mm)	C2 (mm)	B2 (mm)	Transition (mm)
X49 a X51	250 CF	304.8	250	256	3	7	194	60	14
X48	100 CF	152.4	104	108	2	5	151	35	10
X52	40 CF	69.9	37	40	1.5	5	98	25	11

Mechanical analyses

Shielding Blocks

- Worst case: seismic loads.
- Calculated overturning of blocks, and re-stabilization forces.

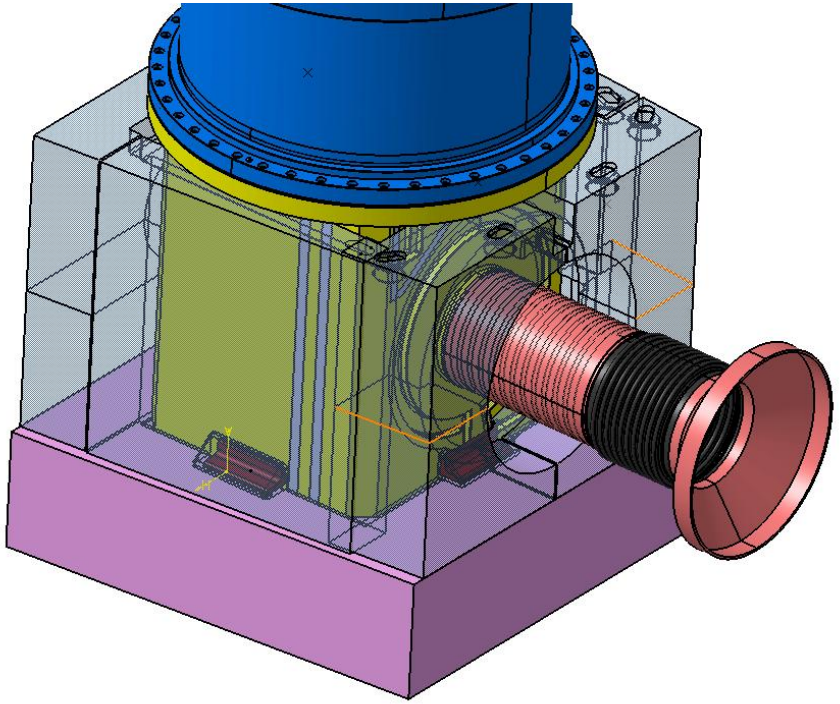

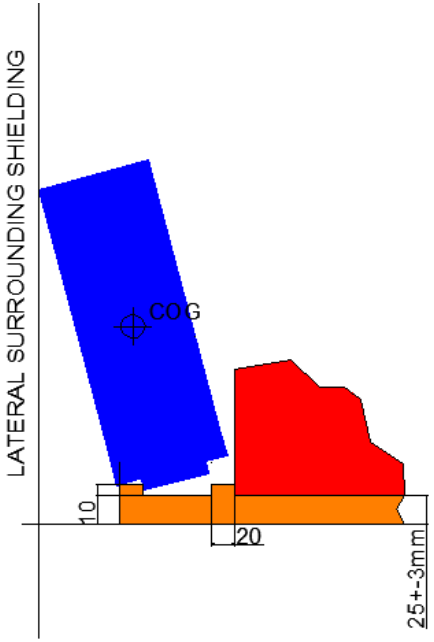

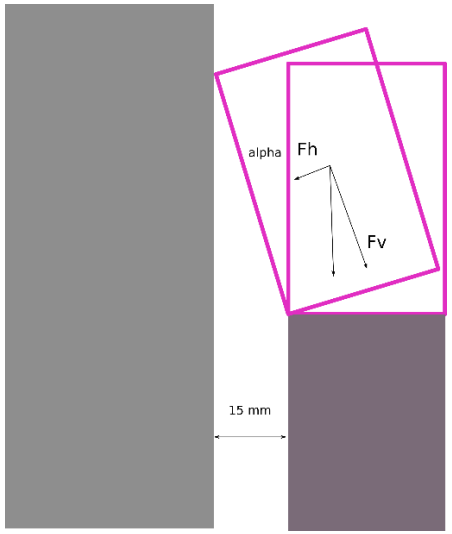

Shielding block stabilization

Mechanical analyses

Joint coefficients

- Designed to allow volumetric inspections allowed in every component.
- Only the PB cooling channels cannot have vol. inspect.
- In service inspections don't have same req. as in workshop.
- Example: vessel feedthroughs (RT or UT).

Types of weld

- Type I.1 welds commonly used.
- Only Type III.1 will be used in Feedthroughs (RT feasible).

Table RD 3355.1a: coefficient of welded joint J

	Type of welded joint authorized			Type of welded joint tolerated
Examinations Volumetric examination : radiographic or ultrasonic Surface examination: liquid penetrant or magnetic particle	**I.1 I.2 I.3 III.1**	**II.1 III.2**	**II.2 III.3 IV V VI**	**VII**
Volumetric examination + Surface examination after welding (both sides)	1			
Surface examination during welding + surface examination after welding (one side)	0.85	0.85	0.5	0.5
Surface examination after first pass + surface examination after welding (one side)	0.7	0.7	0.5	0.5
Surface examination after welding (one side)	0.5	0.5	0.5	0.5

2012 Afcen RCC-MRx Code — Section III – Tome 1 – Subsection B: class $N1_{Rx}$ reactor components and supports

Table RB 3334.4a: definition of types welded joints

Examples	Definition of types welded joints				
	I.1	butt welding	full penetration	two sides accessible	back welding
	I.2	butt welding	full penetration	two sides accessible	gaseous back protection with or without insert
	I.3	butt welding	full penetration	two sides accessible	on temporary backing strip can be inspected after removal of the strip
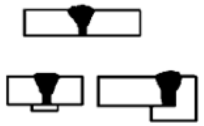	II.1	butt welding	full penetration	back side inaccessible	gaseous protection with or without insert
	II.2	butt welding	full penetration	back side inaccessible	permanent backing strip
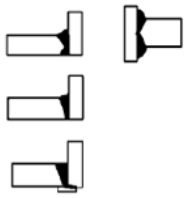	III.1	fillet or T	full penetration	two sides accessible	back weld or back machining
	III.2	fillet or T	full penetration	back side inaccessible	gaseous back protection
	III.3	fillet or T	full penetration	back side inaccessible	permanent backing strip
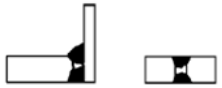	IV.1 IV.2	fillet or T butt welding	partial penetration	double opening preparation	double bead
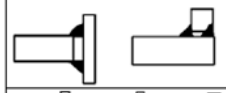	V	fillet or T	partial penetration or no penetration	straight edges or single opening preparation	double bead
	VI	fillet or T butt welding	partial penetration	single opening preparation	single bead
	fillet or T	no penetration	straight edges preparation	single bead	single bead

Analysis by FEM

Mechanical analyses

Analysis by FEM

- General design rules are used, according to class N3Rx (MQC3) RCC-MRx components – RD 3200.
- Stress analysis to compare with material limits for level A, C and D scenarios.
- Buckling analysis
- **Shell elements for the PBW-Vessel.**
- **Solid elements for the PB.**
- Bolts simplified as bonded contacts.

Displacements of PBW sealing surfaces and PB bottom surface for PBI

- Mechanical displacement of **sealing surfaces** is calculated.
- Thermal analysis is presented in later CDR section.

Mechanical analyses

FEM Model

- Meshing
  - Shell mesh for the PBW-Vessel.
  - Solid mesh for the PB.

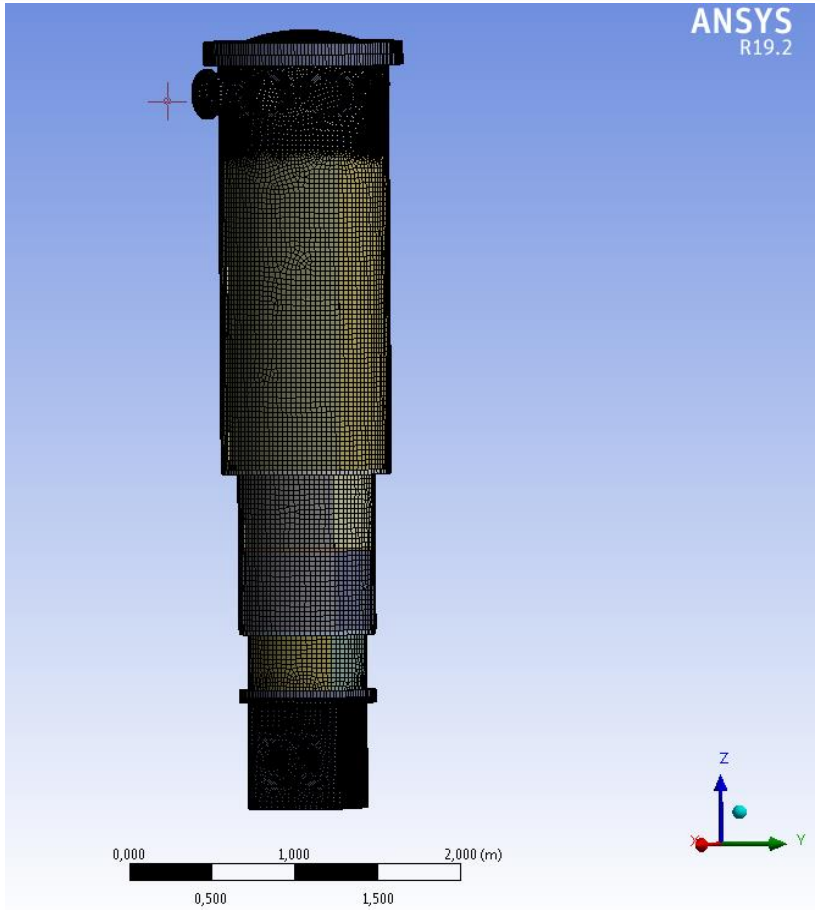

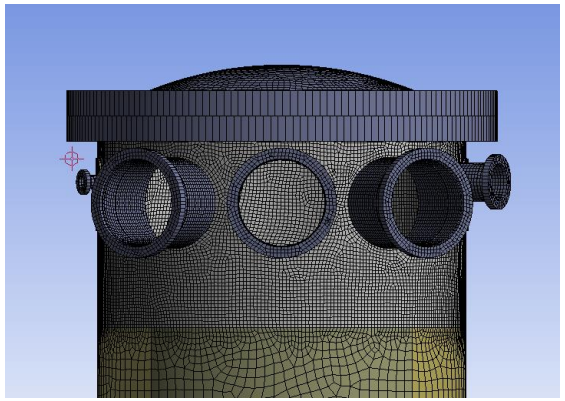

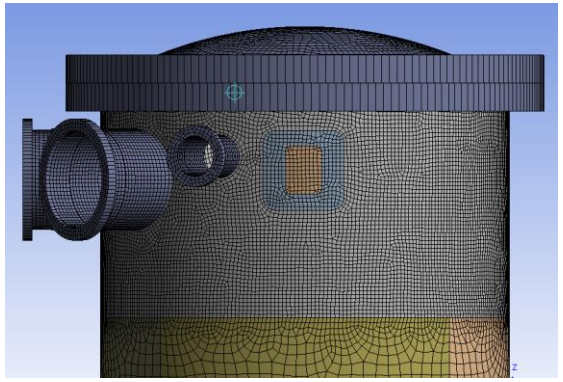

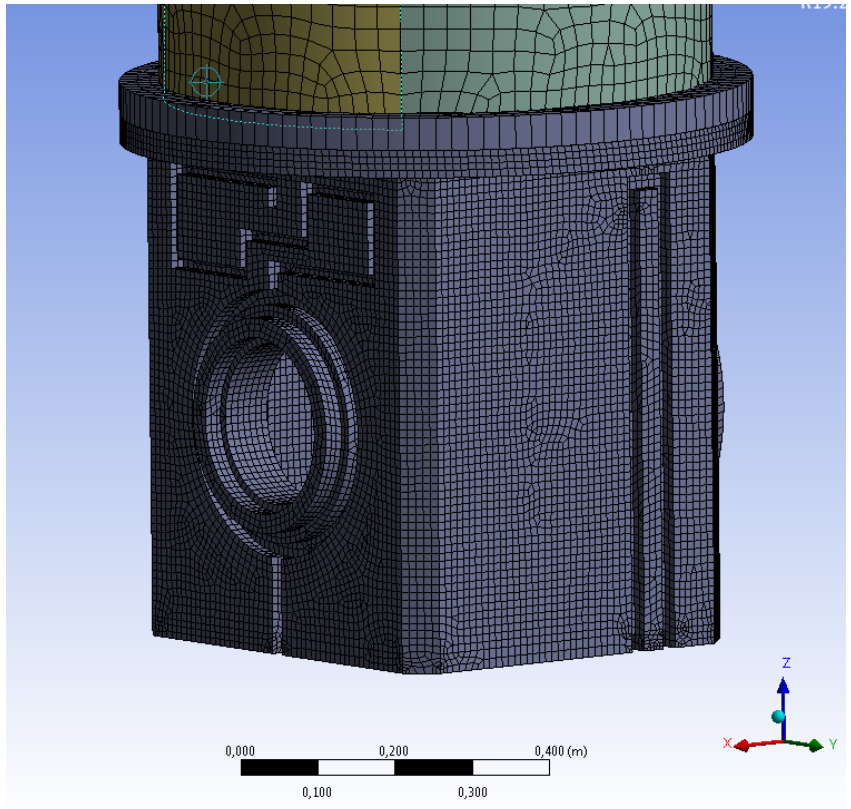

Mechanical analyses

FEM Model

- Shielding blocks inside modelled as point masses. Attached to surfaces depending of the movement during load scenario.

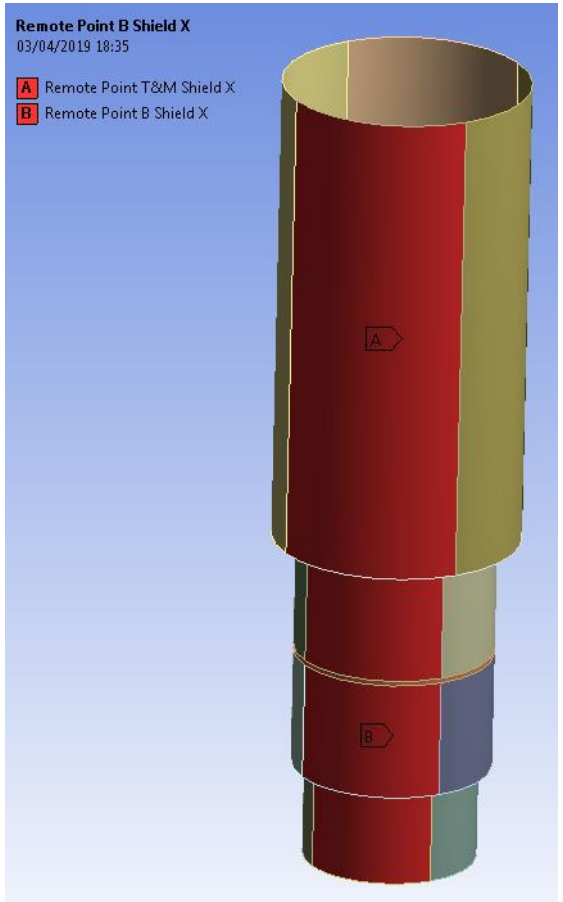

Horizontal seismic acceleration

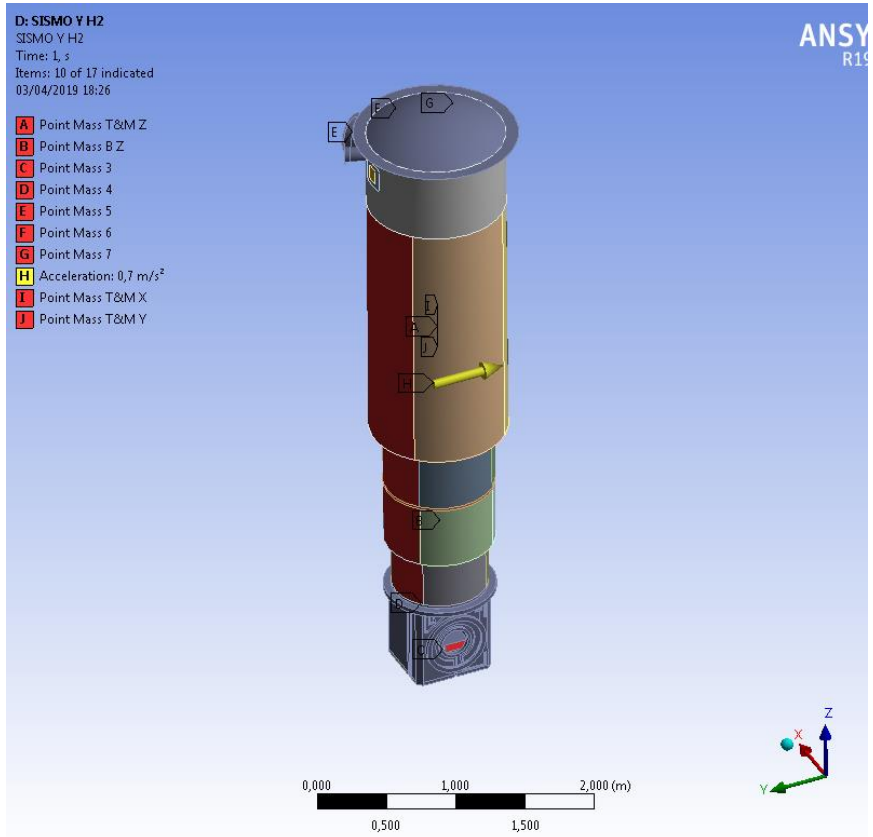

Seismic acceleration in Y axis

Mechanical analyses

FEM Model

- Nozzles. Point masses in DN250 to represent Cabling and media weight.

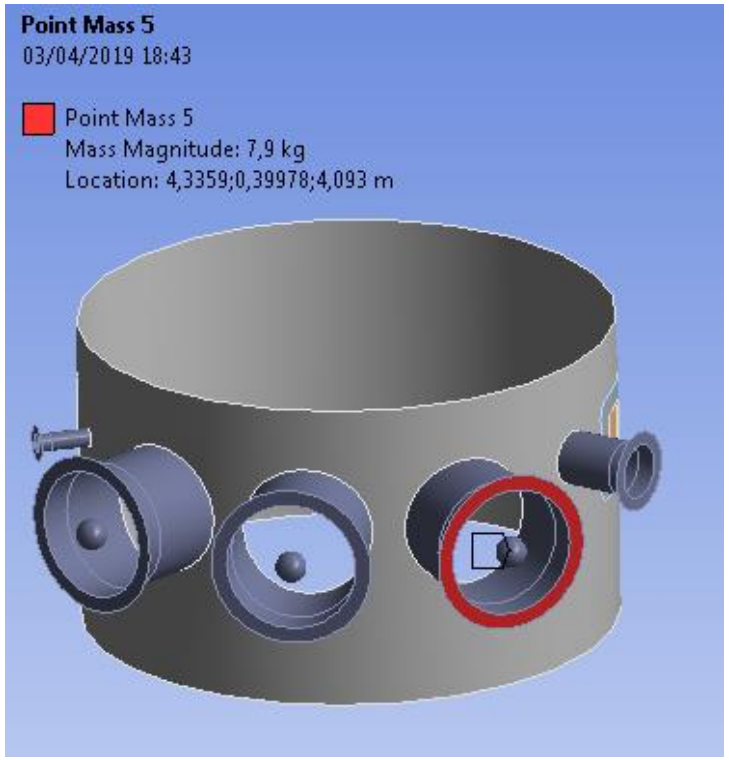

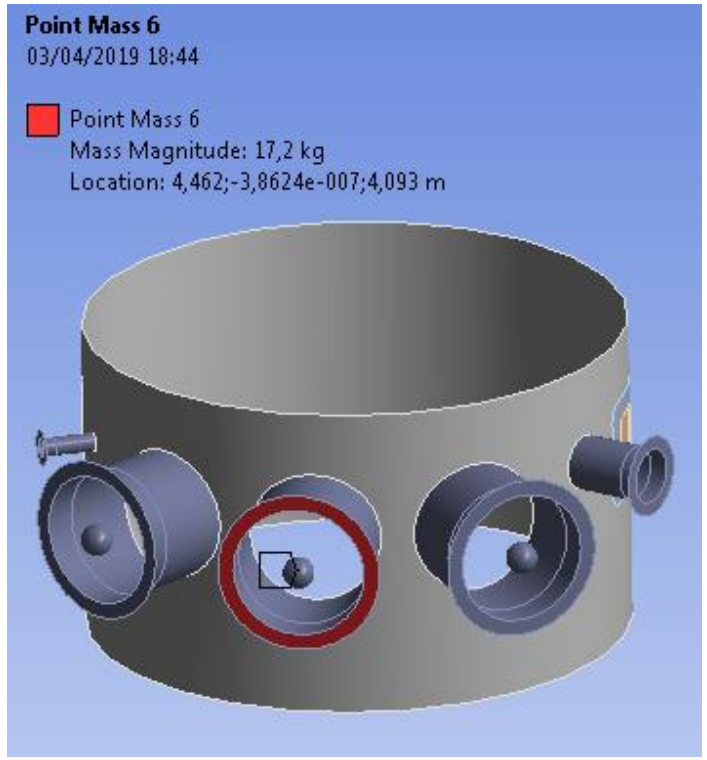

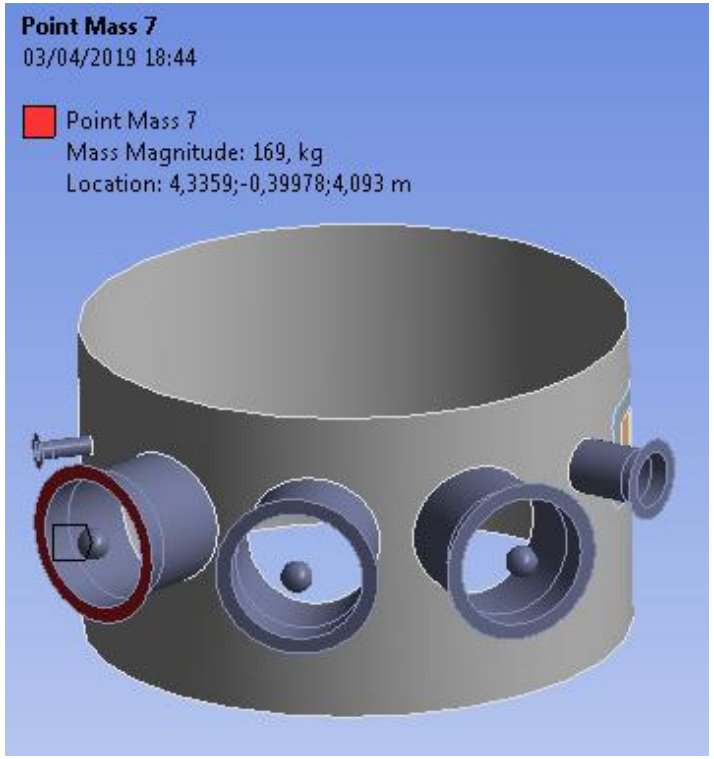

Mechanical analyses

PBW Seal forces

- Nozzles. Point masses in DN250 to represent Cabling and media weight.

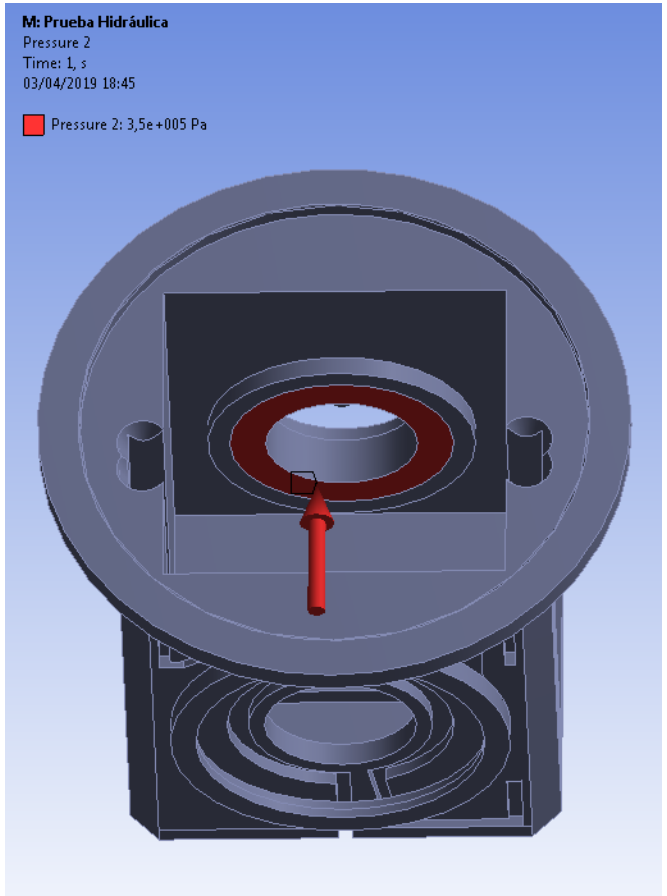

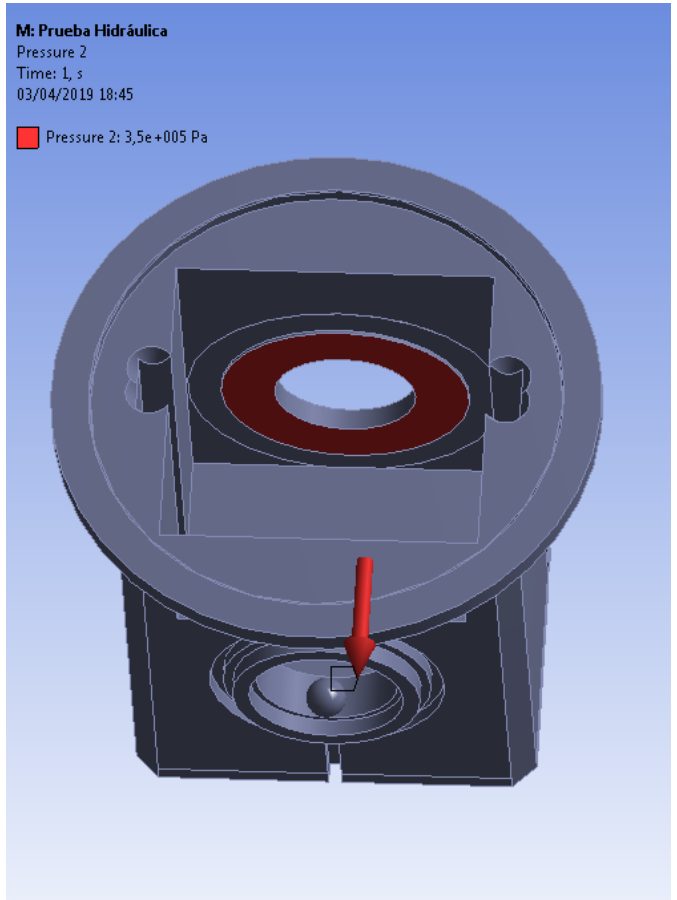

Mechanical analyses

Buckling analysis

- **Rigid struts modelled as remote points.**
- Point masses with inertia properties for shielding blocks.
- Assessed by analytical calculations.

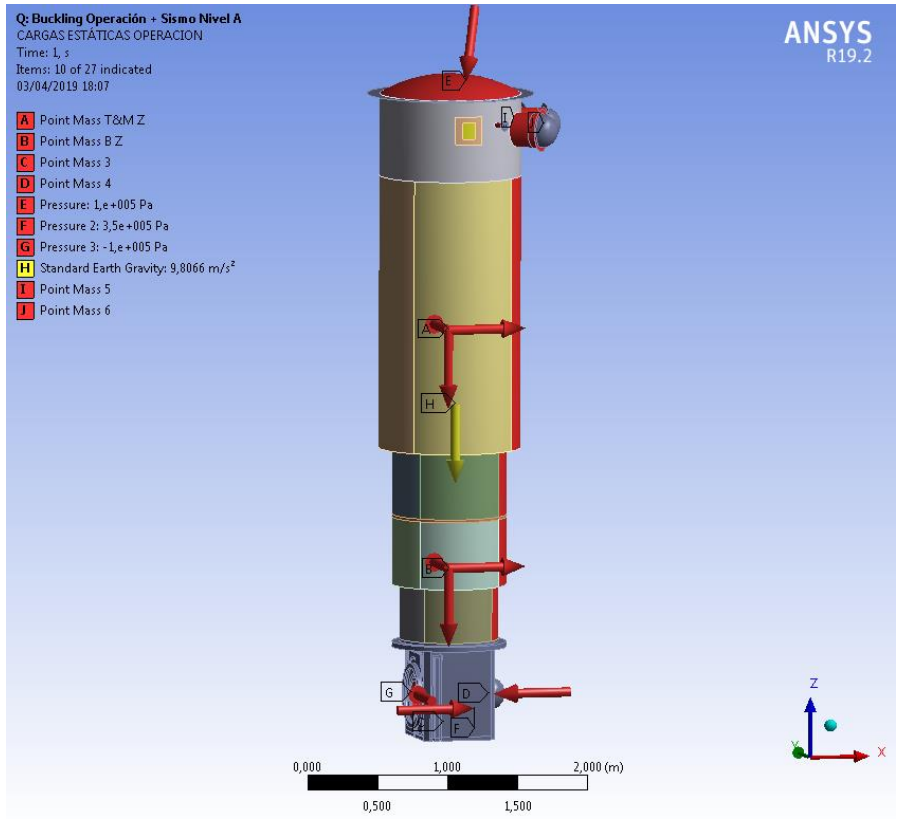

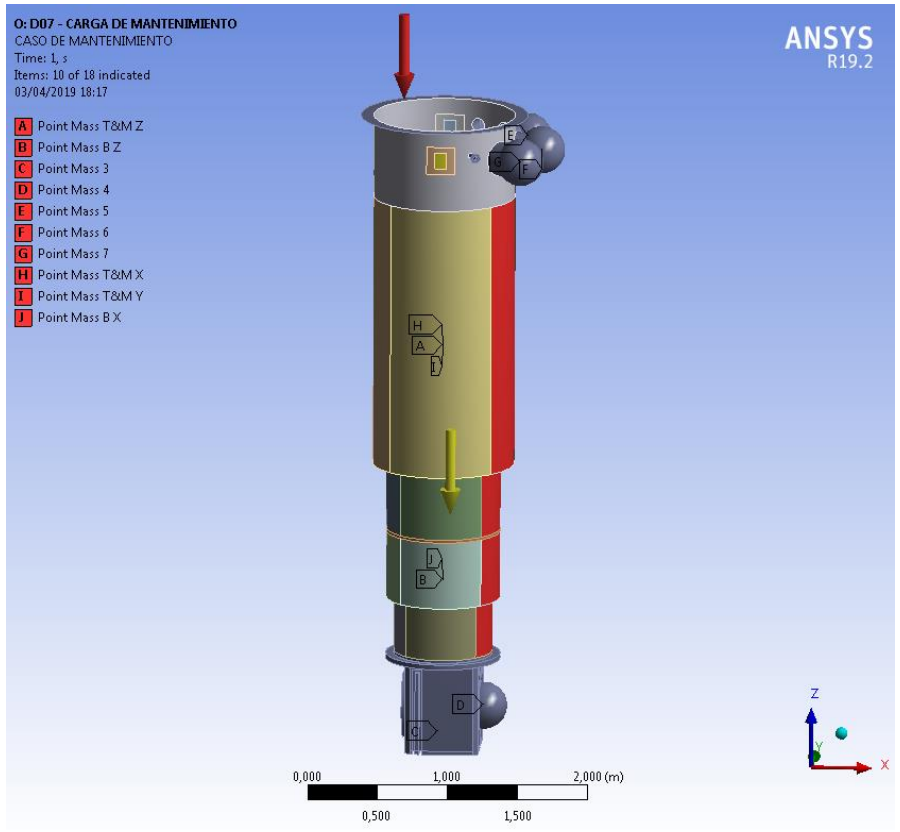

Mechanical analyses

RESULTS - Buckling analysis

- 100 eigen modes are simulated.
- Minimum load multiplier for all cases of 62.7.
- There is margin despite being linear calculations.

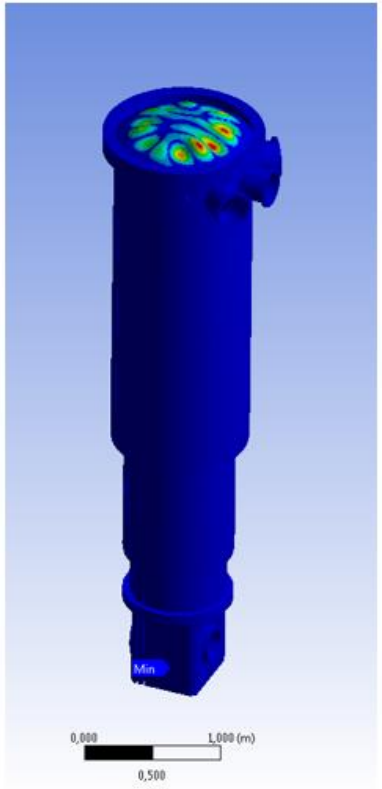

SHAPE NUMBER	LOAD MULTIPLIER
1	62.741861
2	62.769264
3	62.863002
4	62.899364
5	62.977832
6	63.076847
7	63.259889
8	63.279691
9	63.289877
10	63.443267
11	63.521477
12	63.585478
13	63.649383
14	63.717759
15	63.753598
16	63.855776
17	63.967972
18	64.530648
19	64.559111
20	67.265291
21	67.352182
22	67.630687
23	68.152584
24	68.332712
25	68.667195
26	69.100496
27	69.127813
28	69.192875
29	69.304388
30	69.365124
31	69.652065
32	69.751019
33	70.546904
34	70.628590
35	71.365027
36	71.442425
37	72.069476
38	72.099214
39	75.246020
40	75.339622
41	76.401481
42	76.672452
43	76.745575
44	76.865403
45	78.182262
46	78.291481
47	78.306952
48	78.477602
49	78.719593
50	78.959457
51	79.188868
52	80.067338
53	80.169383
54	81.433005
55	81.502494
56	83.082882
57	83.145370
58	83.197666
59	83.227962
60	86.212142
61	86.276585
62	87.409085
63	87.528119
64	90.189298
65	90.355395
66	90.544473
67	90.776301
68	90.845283
69	91.259464
70	91.551481
71	92.399757
72	92.589695
73	93.416224
74	93.512331
75	94.075986
76	94.262222
77	95.820296
78	95.994571
79	97.134007
80	97.198191
81	99.225274
82	99.276193
83	101.04957
84	101.11772
85	101.62740
86	101.78328
87	102.24274
88	102.50160
89	104.82033
90	106.23142
91	106.51048
92	108.75240
93	108.91770
94	109.12466
95	109.23426
96	110.80132
97	110.97850
98	111.14093
99	111.52024
100	111.61610

Mechanical analyses

Stress analysis for Type P damages

SI | Membrane + Bending

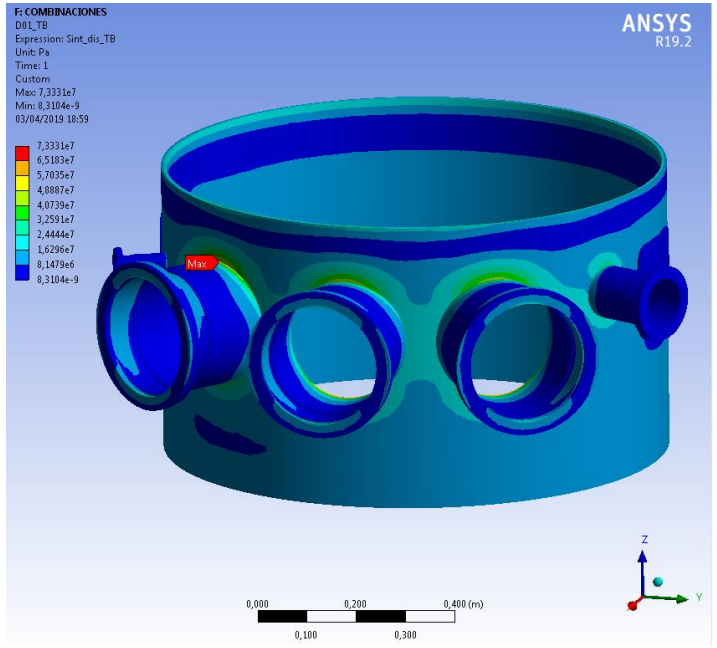

SI | Membrane

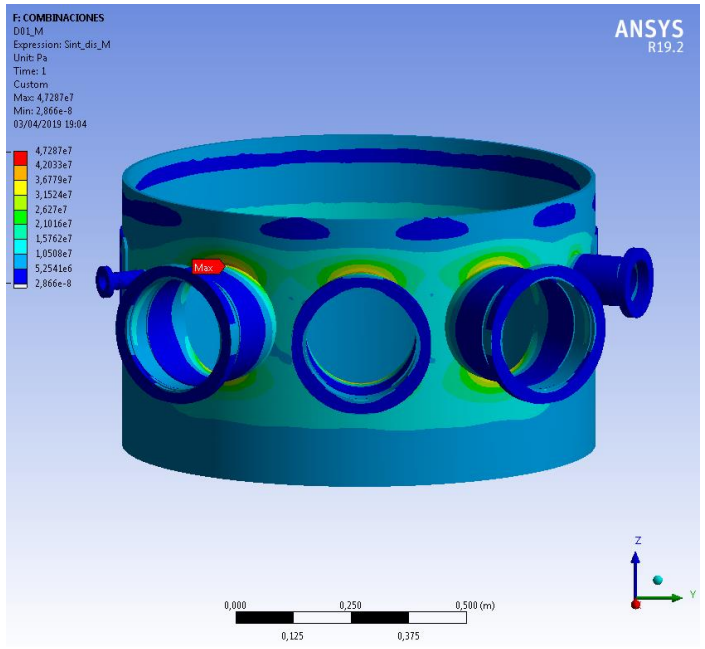

Nozzle Stress Intensity. Membrane + Bending / Membrane — D01

Mechanical analyses

Stress analysis for Type P damages

SI | Membrane + Bending

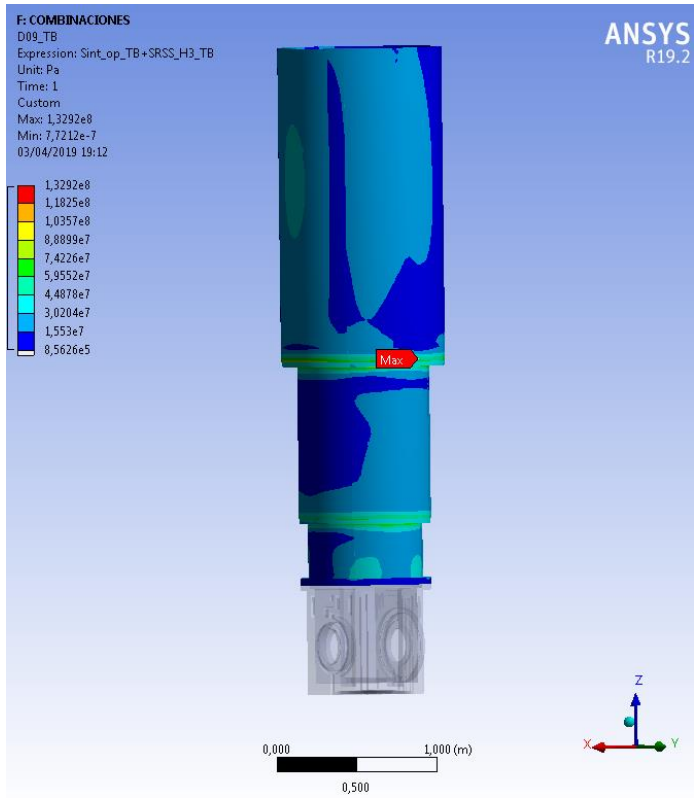

SI | Membrane

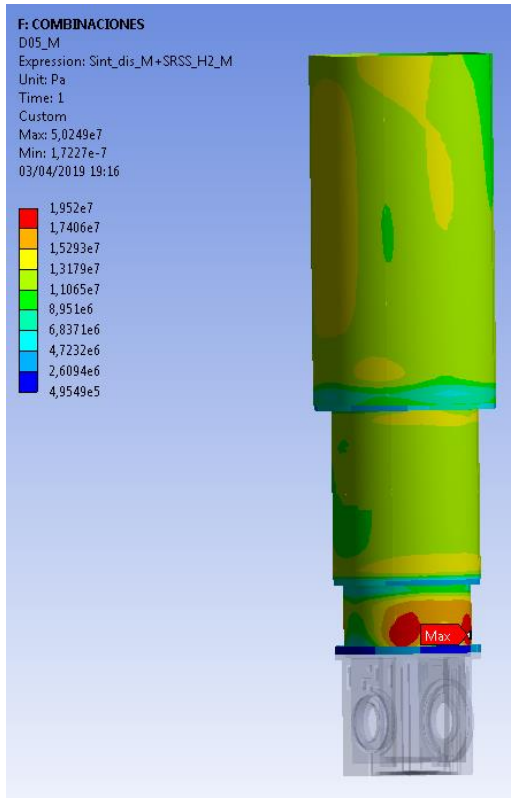

Vessel Stress Intensity. Membrane + Bending / Membrane — D09

Mechanical analyses

Stress analysis for Type P damages

SI | Membrane + Bending

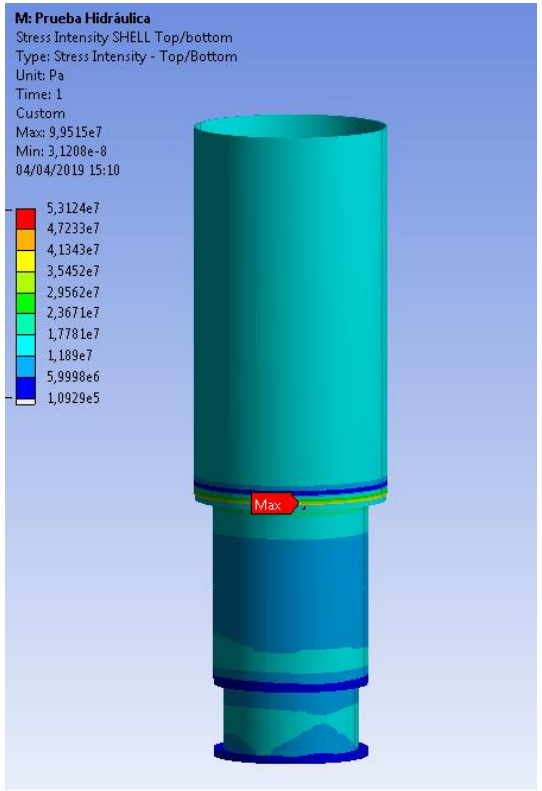

SI | Membrane

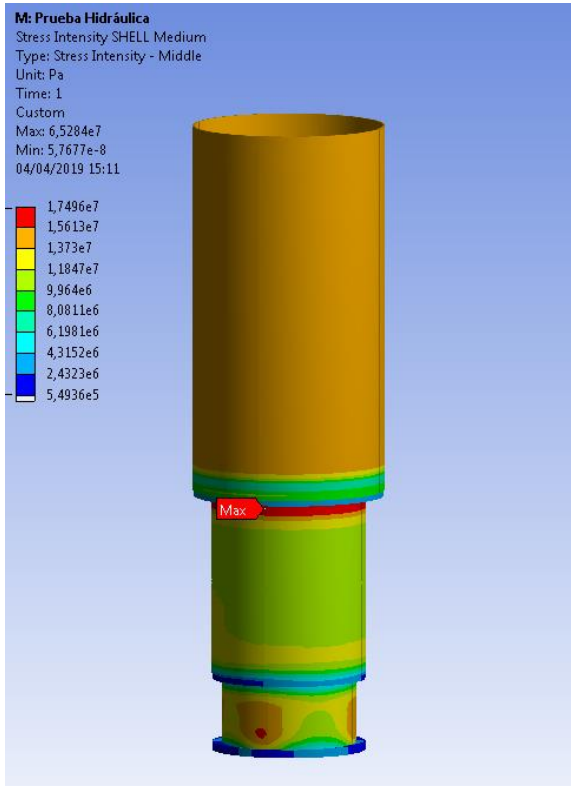

Vessel Stress Intensity. Membrane + Bending / Membrane — Pressure Test

Mechanical analyses

Stress analysis for Type P damages

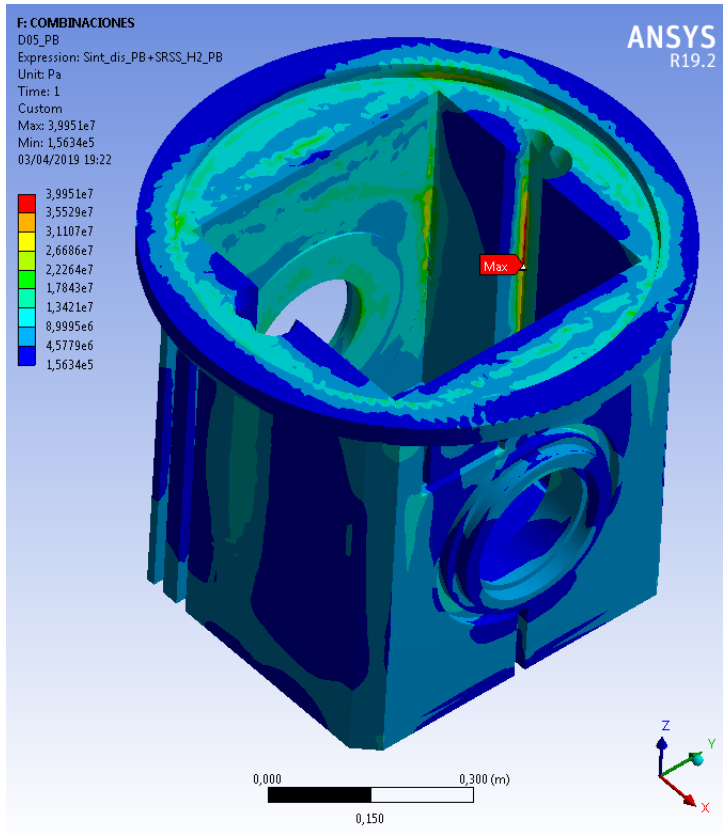

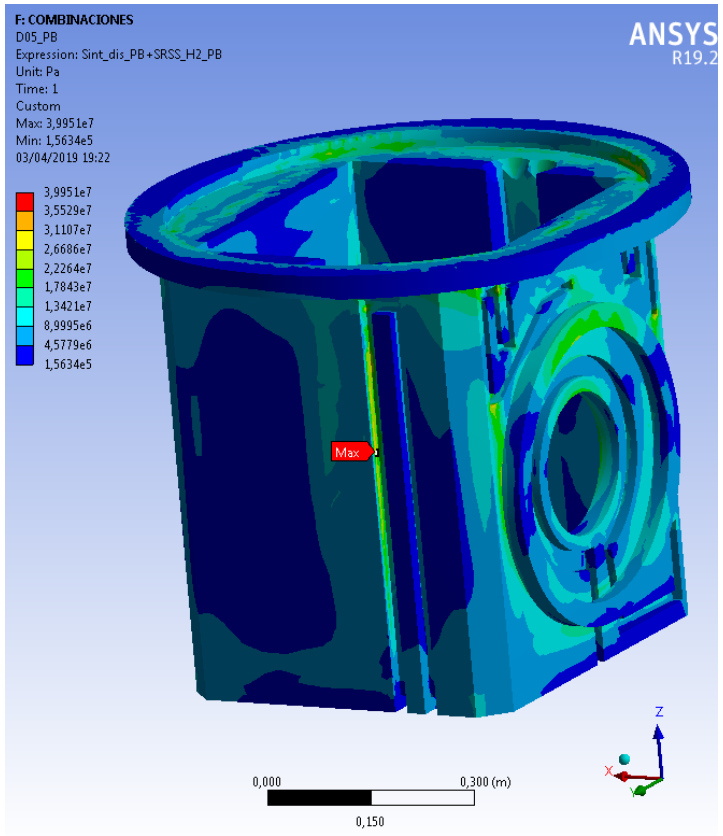

Port Block Stress Intensity. — D04

Mechanical analyses

Stress analysis for Type P damages

- Supporting plate reactions.

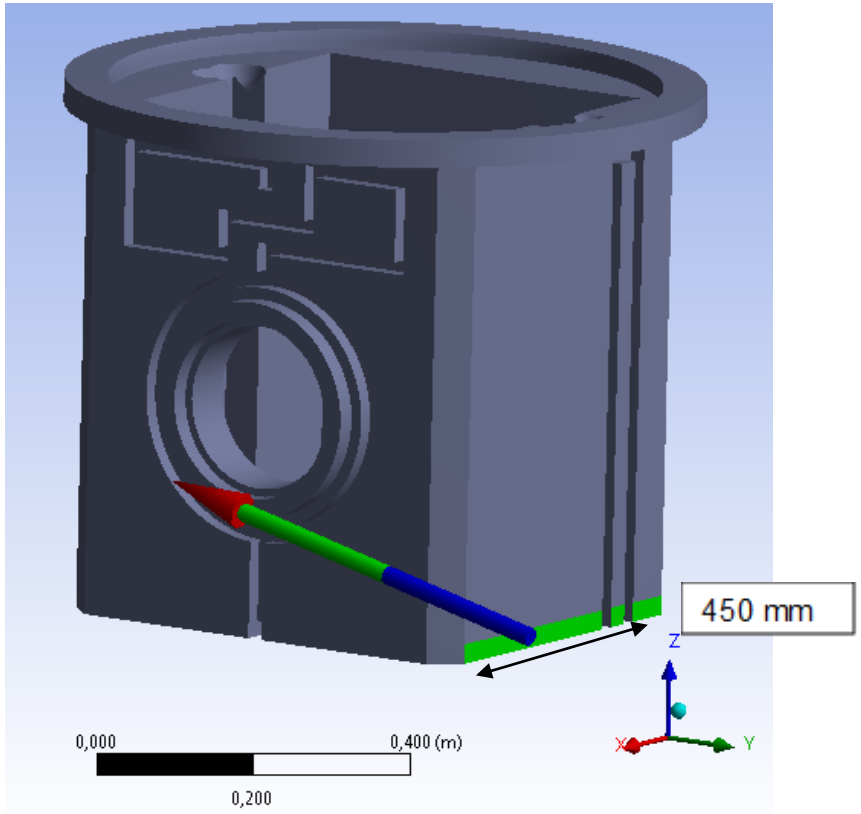

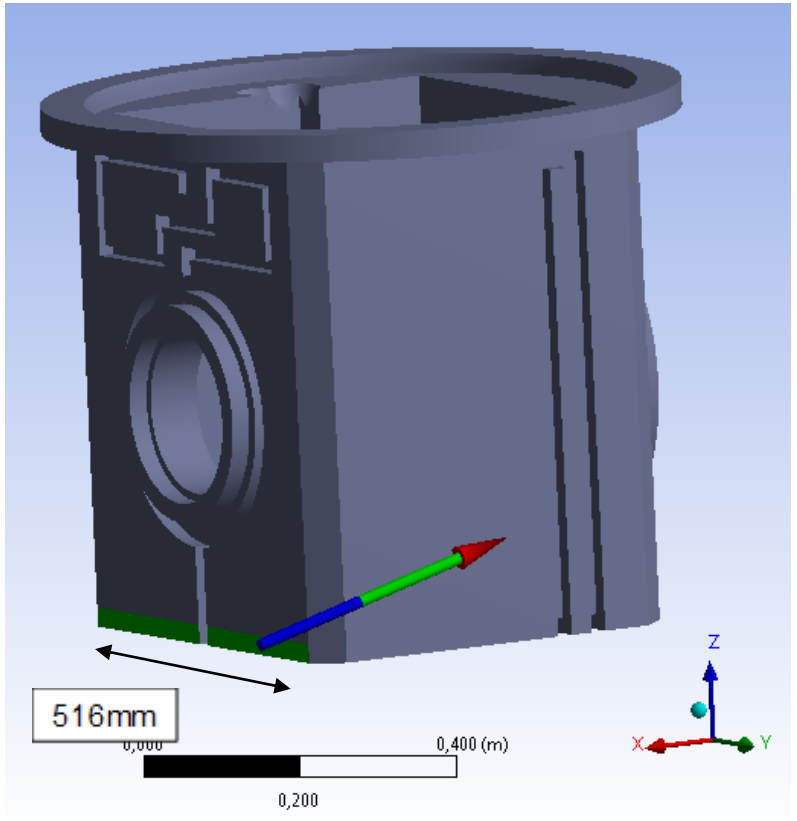

Results

Mechanical analyses

PBW-Vessel

- RD 3353.2 and RD 3355.

- Level A : $\overline{P_m} \le J \cdot S$ $\overline{P_L} \le 1.5 \cdot J \cdot S$ $\overline{P_m + P_b} \le 1.5 \cdot J \cdot S$ $\overline{P_L + P_b} \le 1.5 \cdot J \cdot S$
- Level C : $\overline{P_m} \le 1.5 \cdot J \cdot S$ $\overline{P_L} \le 1.8 \cdot J \cdot S$ $\overline{P_m + P_b} \le 1.8 \cdot J \cdot S$ $\overline{P_L + P_b} \le 1.8 \cdot J \cdot S$
- Level D : $\overline{P_m} \le 2 \cdot J \cdot S$ $\overline{P_L} \le 2.4 \cdot J \cdot S$ $\overline{P_m + P_b} \le 2.4 \cdot J \cdot S$ $\overline{P_L + P_b} \le 2.4 \cdot J \cdot S$

Part of vessel	Diameter	Type of stress		Calculated / Allowable Stresses (MPa)													
				Combination D01 –Level A		Combination D04 –Level A		Combination D05 –Level A		Combination D07–Level A		Combination D09–Level C		Combination D11–Level D		Hydraulic Test –Level C	
				$SI\|_{Calculation}$	$SI\|_{Allowable}$	$SI\|_{Calculation}$	$SI\|_{Allowable}$	$SI\|_{Calculation}$	$SI\|_{Allowable}$	$SI\|_{Calculation}$	$SI\|_{Allowable}$	$SI\|_{Calculation}$	$SI\|_{Allowable}$	$SI\|_{Calculation}$	$SI\|_{Allowable}$	$SI\|_{Calculation}$	$SI\|_{Allowable}$
Flange junction with vessel shell & any Shell	Ø1010	Membrane	P_m	10.6	120	18.1	120	15.2	120	18.5	120	42.9	180	122	240	15.4	180
		Membrane + Bending	P_m+P_b	29.3	180	65.8	180	40.55	180	46.3	180	103	216	205	288	53.12	216
	Ø810	Membrane	P_m	12.1	120	23.7	120	15.6	120	27.2	120	44.6	180	100.5	240	17.5	180
		Membrane + Bending	P_m+P_b	17.1	180	76.7	180	26.4	180	82.1	180	132.9	216	281.8	288	29.6	216
	Ø700	Membrane	P_m	15.12	120	24.7	120	19.5	120	26.1	120	39.8	180	82.5	240	15.9	180
		Membrane + Bending	P_m+P_b	34.8	180	79.5	180	42.20	180	93.9	180	99.3	216	165.4	288	24.13	216
Perforated head or shell	Ø1010	Membrane	P_m	14.4	120	19.3	120	25.4	120	12.1	120	50.44	180	139	240	21.3	180
		Membrane + Bending	P_m+P_b	20	180	20	180	29	180	12.27	180	64.9	216	176	288	29.5	216

Mechanical analyses

PBW-PB

- RD 3353.2 and RD 3355.

Part of the Port Block	Maximum Stress Intensity	Calculated / Allowable Stresses (MPa)													
		Combination D01 –Level A		Combination D04 –Level A		Combination D05 –Level A		Combination D07–Level A		Combination D09–Level C		Combination D11–Level D		Hydraulic Test –Level C	
		$SI\|_{Calculation}$	$SI\|_{Allowable}$	$SI\|_{Calculation}$	$SI\|_{Allowable}$	$SI\|_{Calculation}$	$SI\|_{Allowable}$	$SI\|_{Calculation}$	$SI\|_{Allowable}$	$SI\|_{Calculation}$	$SI\|_{Allowable}$	$SI\|_{Calculation}$	$SI\|_{Allowable}$	$SI\|_{Calculation}$	$SI\|_{Allowable}$
Port Block Top Flange Junction	Max Stress Intensity	24.36	120	55.3	120	30.6	120	58	120	84.6	180	167.42	240	28.3	180
Port Block walls	Max Stress Intensity	31.9	120	46.4	120	40	120	29.6	120	84.4	180	216.6	240	38.7	180

Mechanical analyses

Connecting Pipe

- Internal overpressure and vacuum.
- Cooling circuit pressure (in pictures, results from PT).

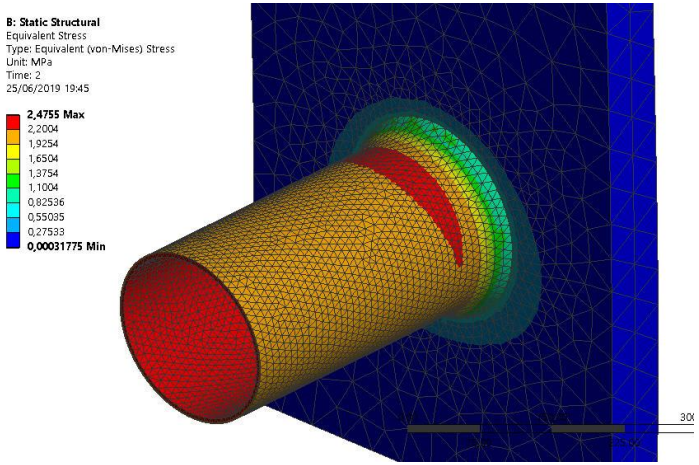

Vacuum

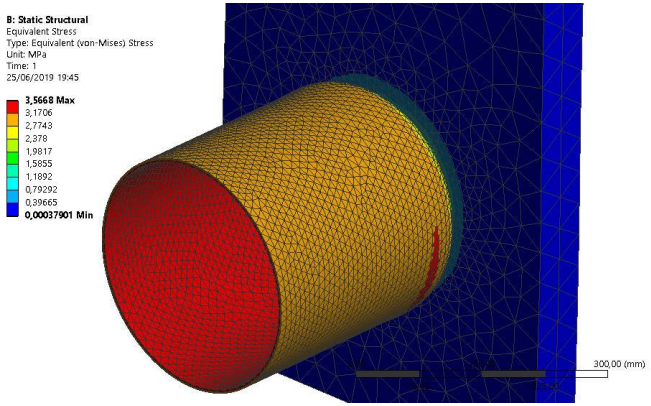

Overpressure

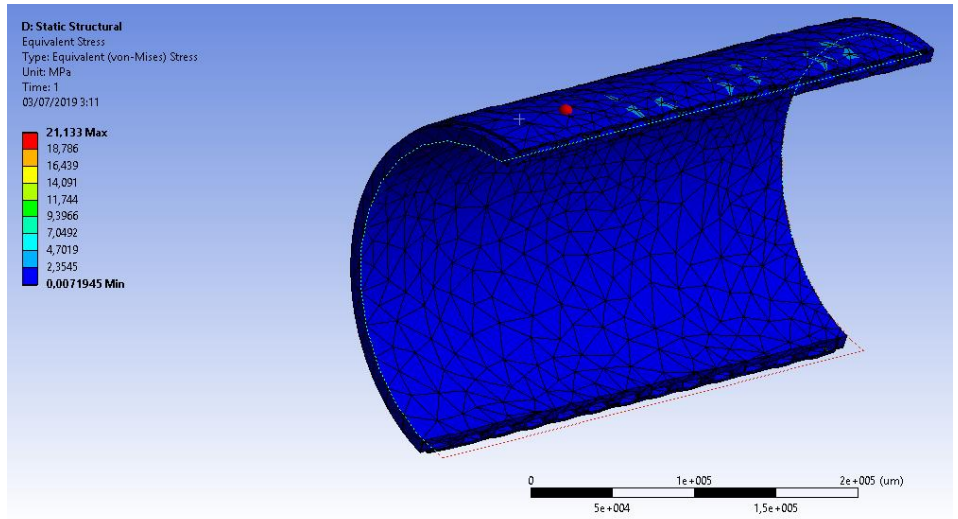

Cooling channles at PT

Mechanical analyses

Sealing surface displacement

- Maximum relative displacement within the same surface is < 35 microns.
- Maximum relative displacement with respect to the PBW Seal surface is < 13 microns.

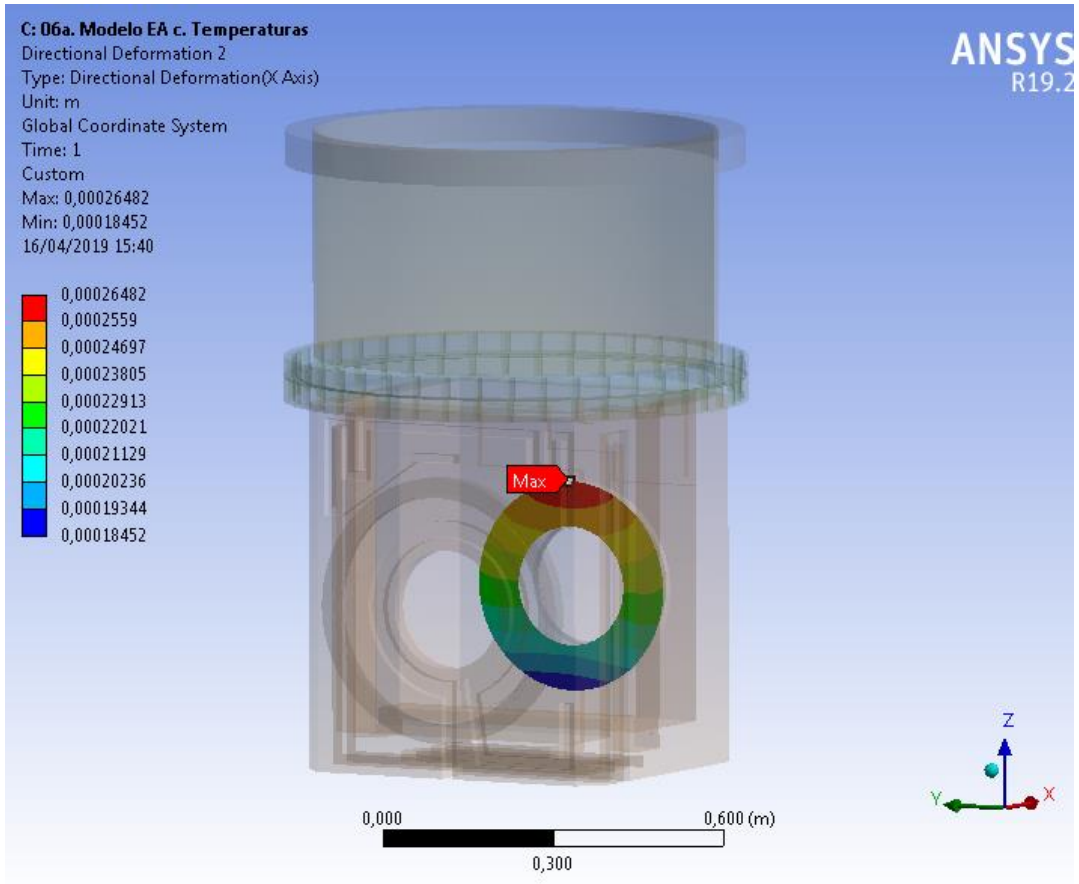

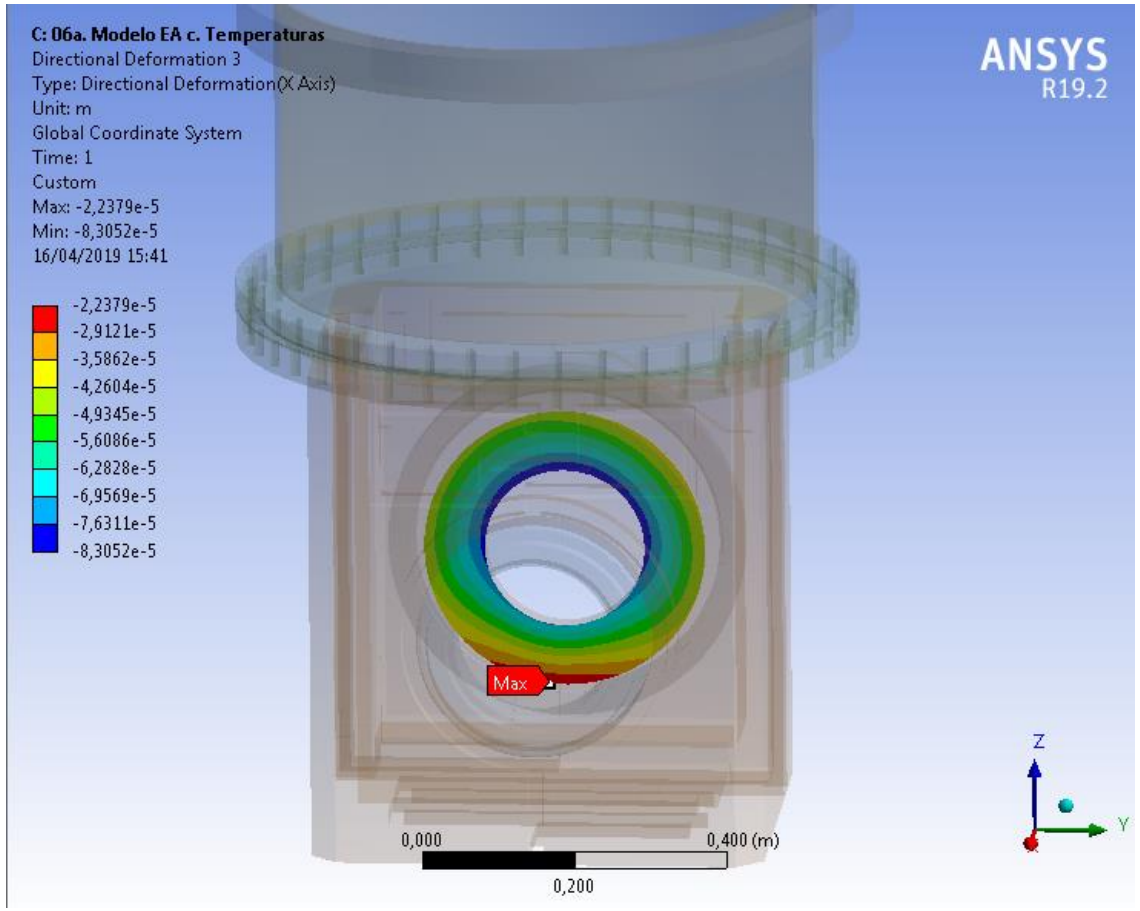

Conclusions

Mechanical analyses

Conclusions

- The **PBW-Vessel**, with increased 10mm thickness, 5 feedthroughs on top, a dished head of 5mm, 2 reinforcement rings and 2 flanges; can **withstand all mechanical loads**. Particularly, the **overpressure/vacuum scenarios**, and **dead weight from PBW-System shielding**.
- The **PBW-PB**, with two openings for the proton beam, 1 flange to connect to the PBW-Vessel, variable thickness in walls; can **withstand all mechanical loads**. Particularly, supporting the **full dead weight transmitted by the PBW-Vessel**.
- The **PBW-PB sealing surfaces are stiff enough** to guarantee proper countersurface for the PBW-Sealing system.
- The **PBW-PB bottom is stiff enough** to control the deformations far below 0.5 mm for the PBI.
- There are **two main gaskets** on top and bottom, materials selected are EPDM and Helicoflex, **designed to work** under both **overpressure and vacuum scenarios**. Guarantee from provider for **leak tightness.**
- The **PBW-PB plates** that cover the **cooling channel** are thick enough to **withstand coolant pressure**. By manufacturer recommendation, they will be **increased to 5-6mm**.
- The design is prepared for inspections in welds to use **weld Joint coefficients=1.0**, except only for the **PB cooling cover plates**, where a **<1 coef. applied to foreseen 5-6mm is enough** to withstand pressure loads. Borescope option as in **Inner Shielding**.
- **Connecting Pipe** permits **decoupling from MV loads**, specially **seismic** ones. In addition, key feature **during operation**, to **absorb thermal displacements**. The full pipe **withstands all mechanical loads**.