Analysis of Residual Activity at FRIB Linac

Mikhail Kostin
Radiation Transport Staff Physicist

This material is based upon work supported by the U.S. Department of Energy Office of Science under Cooperative Agreement DE-SC0000661, the State of Michigan and Michigan State University. Michigan State University designs and establishes FRIB as a DOE Office of Science National User Facility in support of the mission of the Office of Nuclear Physics.

Contributors

- Richard Bennett – FRIB, Remote Handling Group Leader
- Georg Bollen – FRIB, Experimental Systems Division Director
- Dali Georgobiani – FRIB, Radiation Transport Physicist
- Peter Grivins – FRIB, Environmental Safety, Health and Quality (ESH&Q) Manager
- Mikhail Kostin – FRIB, Radiation Transport Staff Physicist
- Robert Lowrie – AECOM N&E Technical Services, Senior Engineering Consultant
- Reginald Ronningen – NSCL, Senior Physicist (retired, on call)

Facility Overview

- Next generation nuclear research facility for rare isotope science
  - Double-folded linac to produce a broad range of primary beams, from 16-O to 238-U
  - Primary beam power 400 kW, 200 MeV/u uranium, higher energy for lighter beams
  - Rare isotope production via in-flight technique
  - Three stage fragment separator
  - Existing NSCL instrumentation for fast, stopped and re-accelerated beams (up to 3, 6 and 12 MeV/u)
  - World-class science on day one
- Possible upgrade options
  - Increased energy up to 400 MeV/u for uranium
  - Light ion injectors
  - ISOL target station
- FRIB user organization
  - 1,300 members

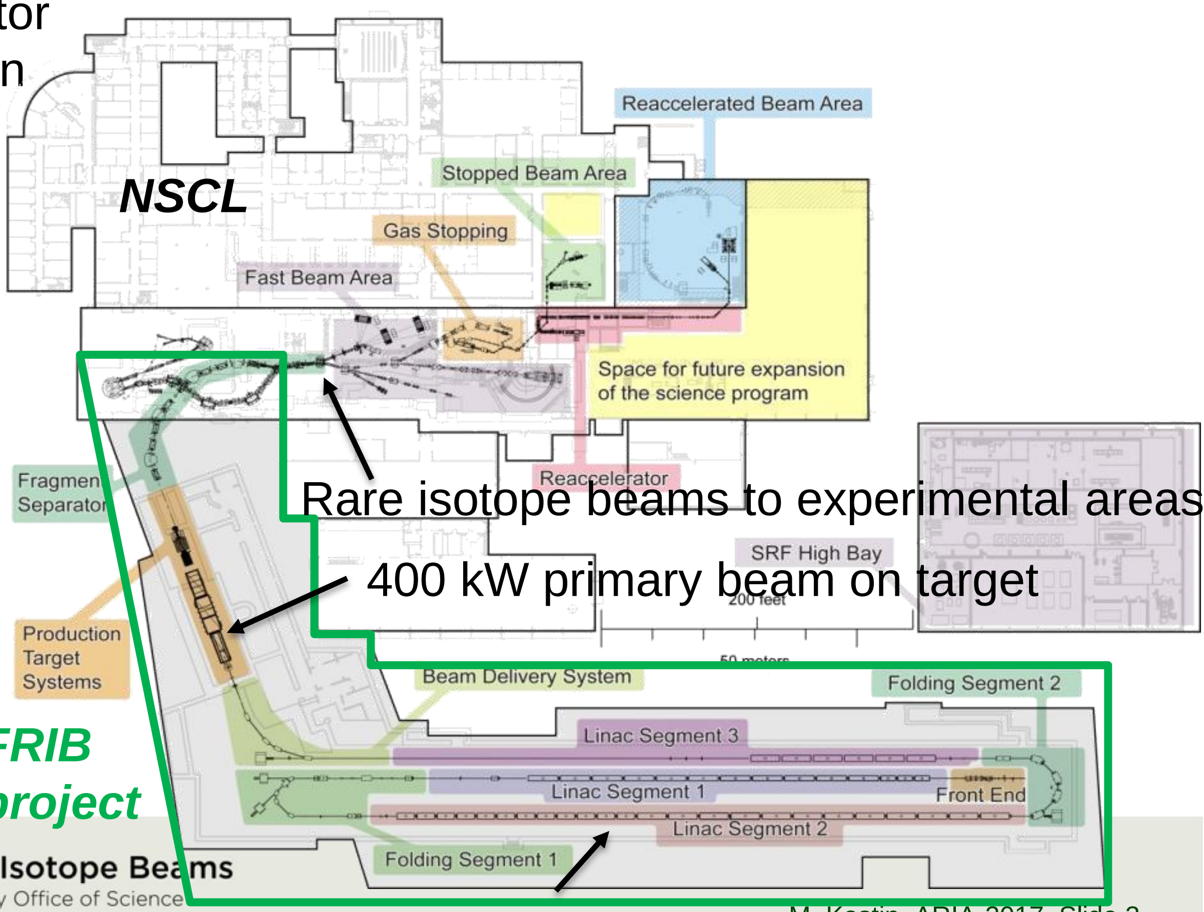

FRIB project

Rare isotope beams to experimental areas

400 kW primary beam on target

1 W/m beam losses

Project Status, Milestones and Plans

- Civil construction complete
- Installation of technical equipment for Accelerator and Experimental Systems ongoing
- Front-end commissioning underway
  - Ion source commissioning complete
  - Commissioning of vertical drop and first part of accelerator this summer
- October 2019, NSCL stops operations
  - Fragment separator reconfiguration begins
- Project completion (CD-4) is scheduled for June 2022
  - Project is managed to completion in FY2021
- 5-year power ramp-up to 400 kW
  - First year of operation up to 10 kW


May 2017

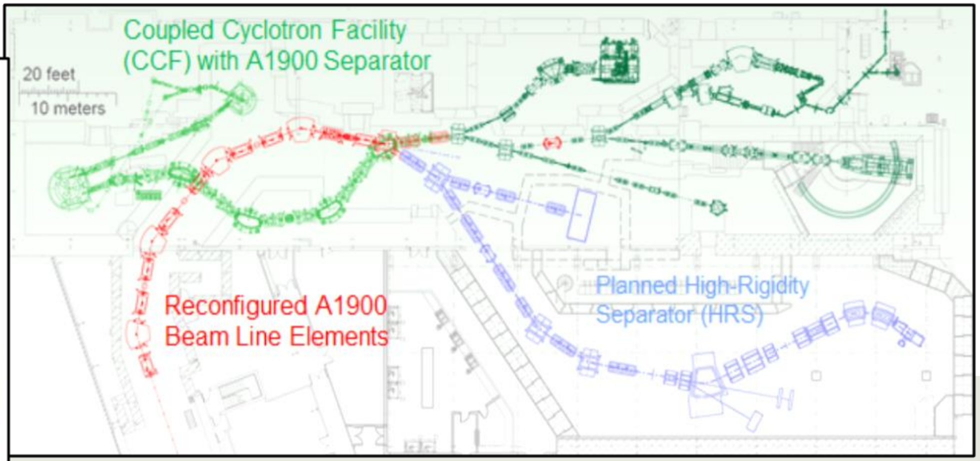

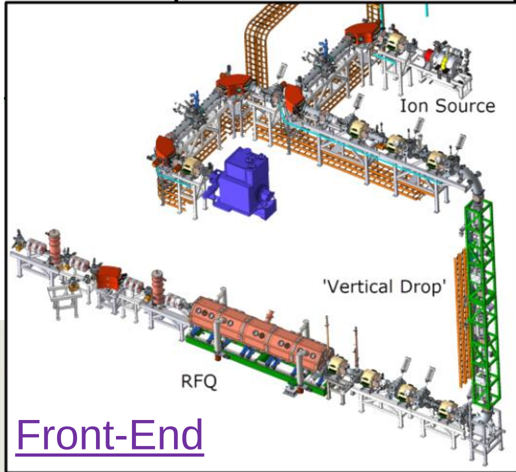

Front-End

Device Activities in Context of NRC Regulations

- License impacts how we store and move radioactive waste
- Michigan State University (MSU) has maintained broad scope license (Type A) issued by Nuclear Regulatory Commission (NRC) since 1977
- Regulates doses to workers and public, accelerator produced radioactive materials, and air emissions
  - 5,000 mrem/y for workers
  - 100 mrem/y and 2 mrem/(any one hour) for public
  - 10 mrem/y from air emissions to nearest public receptor
  - Limit on total nuclide inventories – Inventories are based on NRC license limits. Limits can be changed via amendments through the NRC.
    - In case of a spill (for example from closed loop cooling water), NRC establishes reporting requirements based on release conditions
- Separate licensing process for FRIB started

Linac High-Loss Devices

- Beam stripping device (1 mg/cm^2)
- Beam dumps are used for commissioning and tune up every time beam is changed
  - FS1-B to study charge states
- Chicanes remove parasitic beams
- Charge state selection device

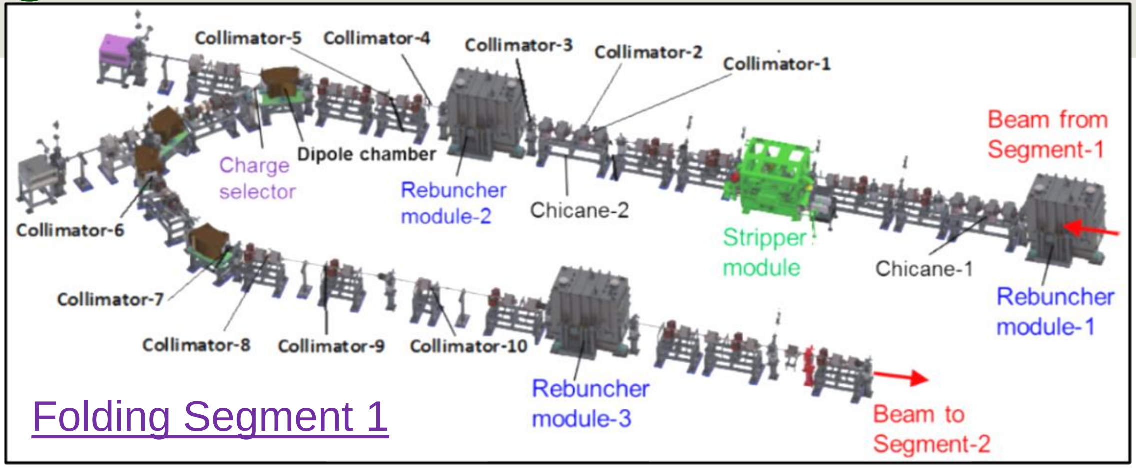

Folding Segment 1

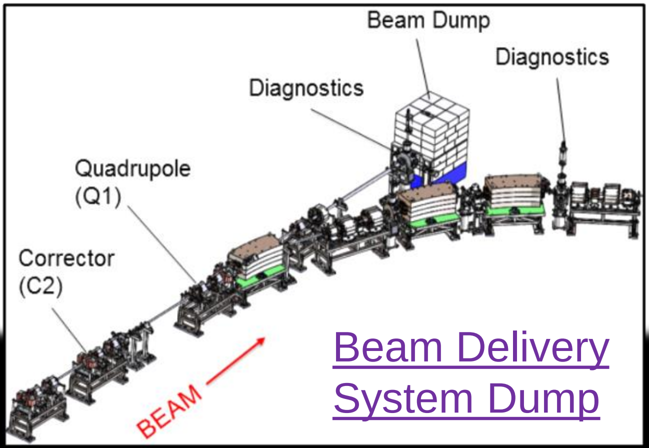

Beam Delivery System Dump

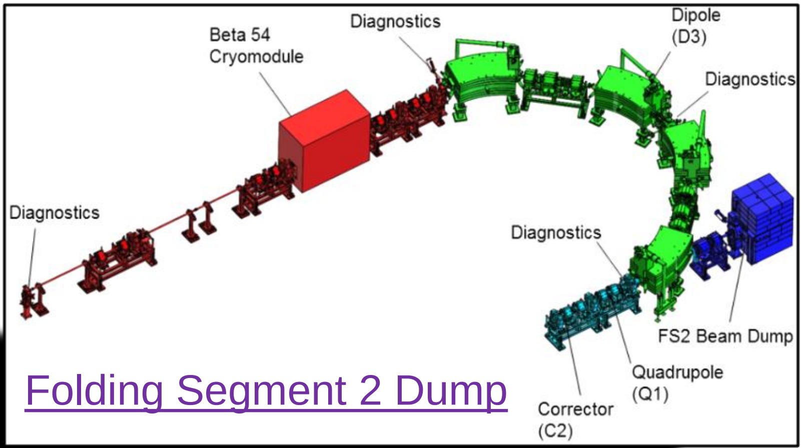

Folding Segment 2 Dump

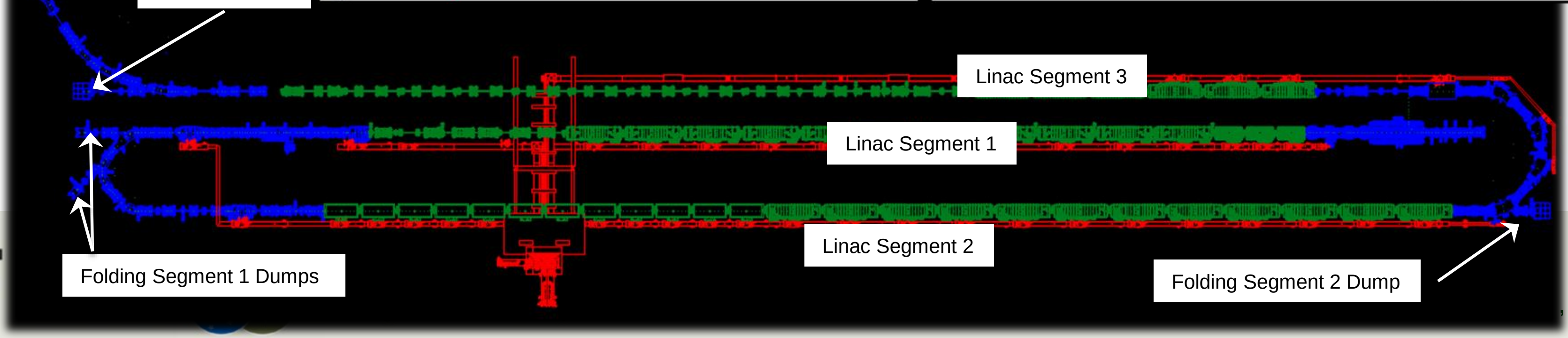

Charge Stripping Device

- Increases ion charge state for efficient acceleration
  - All ions up to Kr are fully stripped
  - Charge states for uranium 76, 77, 78, 79 and 80
- Liquid lithium stripper for baseline operations
  - Carbon foil stripping for initial operations
    - » The foil is mounted on a carriage that rotates and moves vertically to spread around the radiation damage
    - » Will not be used for heavy beams due to limited lifetime
  - Helium gas stripper (with plasma windows) as back up option
- At 20 MeV/u for 18-O only residual activation impacts the design
  - Activation of ground water and prompt dose is low even at full beam power and no local shielding

Carbon Stripper

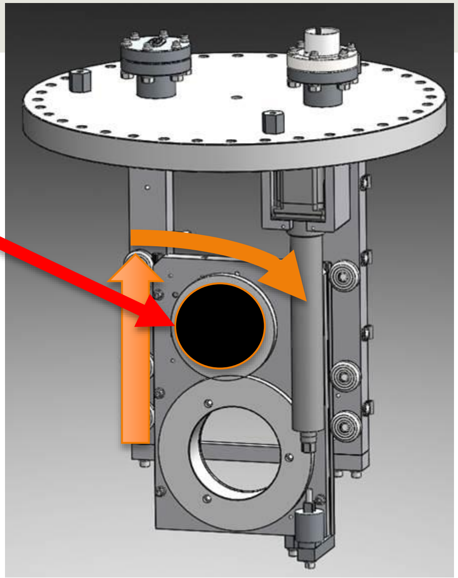

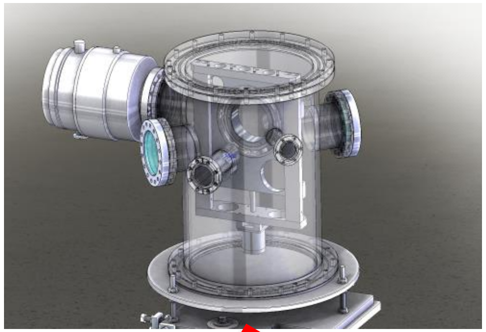

Lithium Stripper

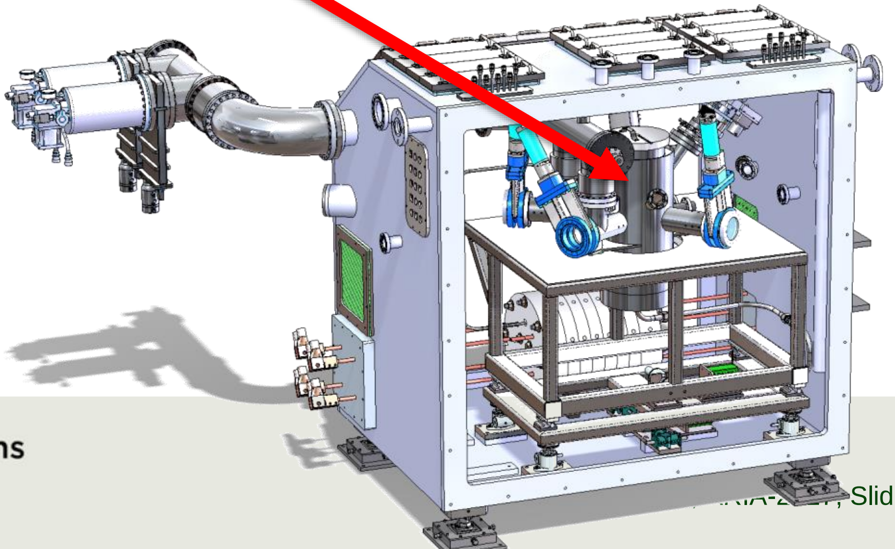

Activation of Lithium Charge Stripping Device

- Simplified model (will revisit)
  - Lithium curtain (1 mg/cm^2) and lithium storage vessel
  - Argon cover gas volume and external argon storage vessel
  - Containment vessel, 0.5-1” steel walls
  - Bounding beam (^{18}O) at 20 MeV/u for full power option (40 kW at stripper or 400 kW on target), plus normal uncontrolled beam losses (1 W/m)
- Residual activity estimated after 30 years of irradiation (facility lifetime), 4 hours decay at 30 cm
  - Renormalization matrix based on decay curves is used for other irradiation and cooling times
- Activities in argon and lithium were also estimated as well as activated argon emissions

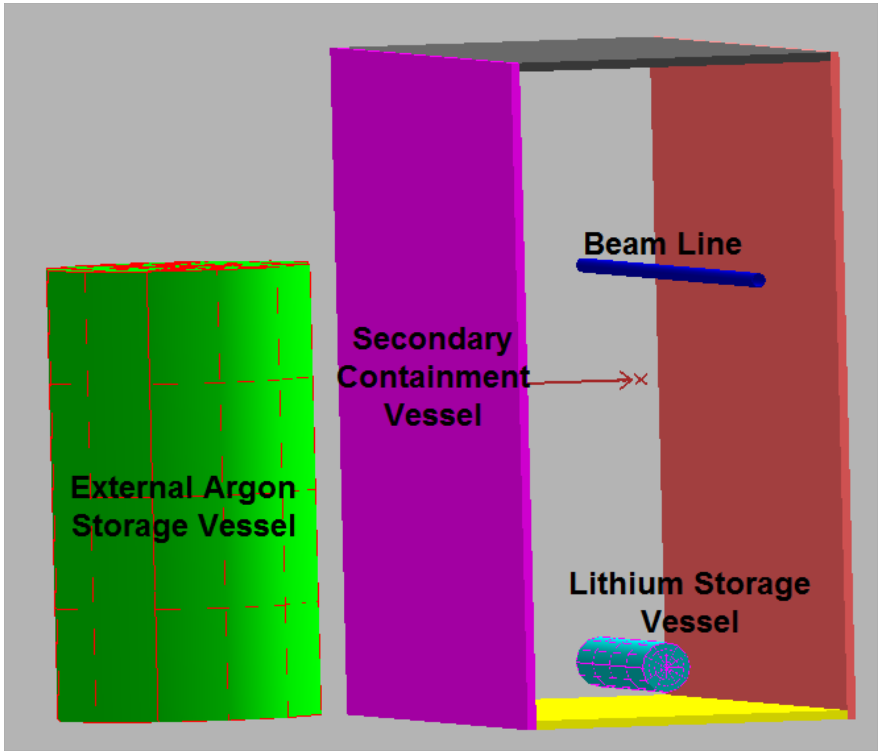

Lithium Charge Stripping Device

- Activation is dominated by beam-stripper interactions, not by normal losses
  - Except upstream external argon reservoir
- Max dose rate is 99.8 mrem/h (for 0.5” wall)
  - 5-100 mrem/h is “Radiation Area”
  - >100 mrem/h is “High Radiation Area”
- A good beam mixture dictated by physics program will be used instead of ^{18}O
  - A factor of several lower residual dose is expected
  - Still in “Radiation Area” – limited access time
- **Will be no local shielding, will use movable screens**

Figure 1

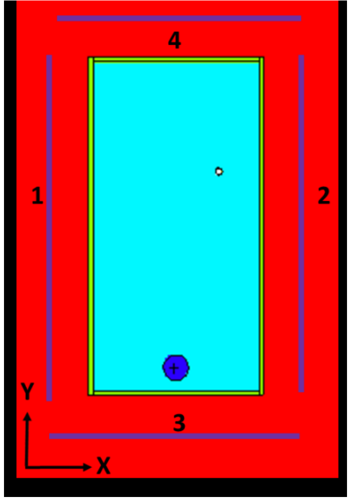

Figure 2

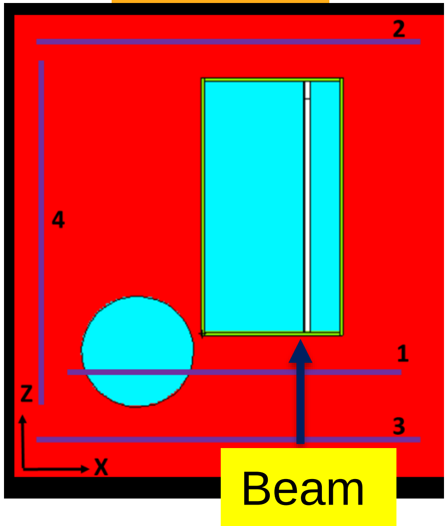

Plane		Max Dose Rate [mrem/h] (0.5”-thick walls)	Max Dose Rate [mrem/h] (1”-thick walls)
Figure 1	1	49.3	33.1
	2	99.8	74.4
	3	34.5	21.8
	4	47.5	32.9
Figure 2	1	42.7	28.0
	2	75.3	72.5
	3	16.4	10.7
	4	18.1	12.7

Max Dose Rate 42.7 mrem/h (0.5” Wall, Figure 2, Plane 1)

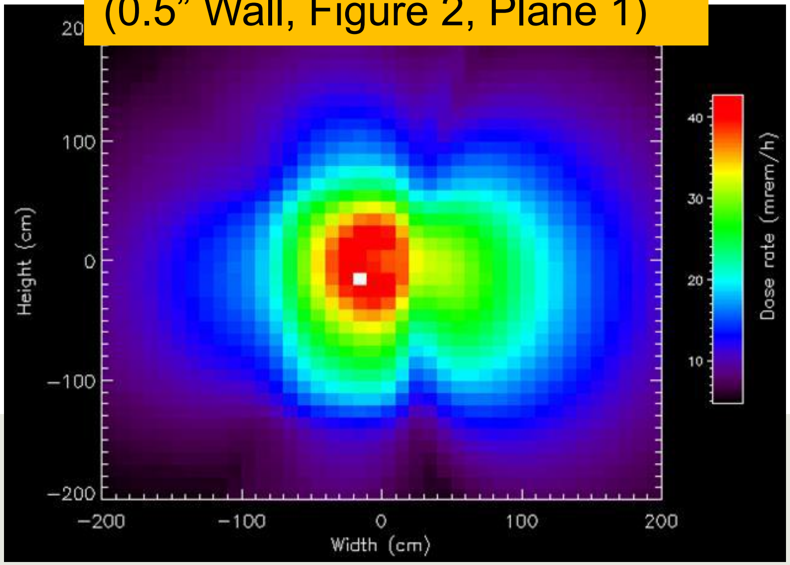

Charge Selection Device

- Initial device designed for up to 10% of full power (≈first year of operation)
  - Final design will be based on operational experience during power ramp-up to 400kW

- Copper alloy movable jaws (water cooled) enclosed in 6”-thick steel box.
  14” hole for vacuum pump on top.

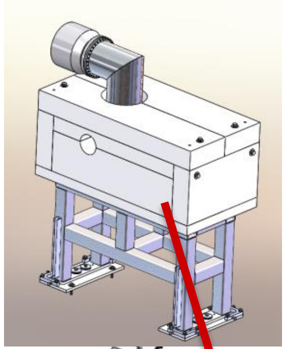

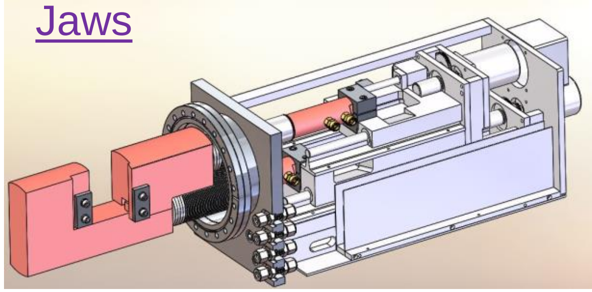

Jaws

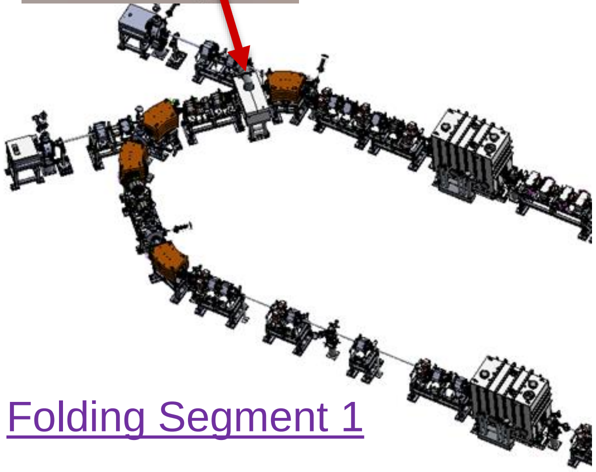

Folding Segment 1

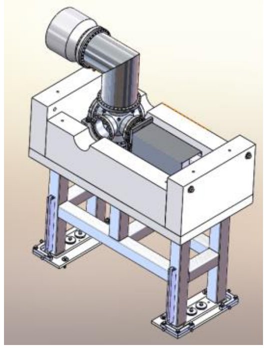

Opened Top Shielding

Beams at Charge Selector

Beam	Duration, weeks	Energy after stripper, MeV/u	Beam power on stripper, W	Number of charge states	Fraction of beam to be accelerated, %	Power loss on charge selection slits, Watts
^{238}U	12	16.5	1250	5	80	250
^{48}Ca	6.34	20	1135	1	90	135
^{78}Kr	2.21	20	1135	3	90	135
^{124}Xe	1.3	17.3	1250	3	80	250
^{18}O	0.86	20	1000	1	100	0
^{86}Kr	0.63	19.3	1130	3	90	130
^{16}O	0.44	20	1000	1	100	0
^{36}Ar		20	1000	1	100	0

- Bounding beam for activation 48-Ca, 135 W, 20 MeV/u (based on shielding activation and fluxes)

Charge Selection Device

- 30 days of irradiation, 1 day of cooling, on contact (0 cm) - “30 d/1 d/0 cm”
- Averaged dose rate is more representative – averaged over ≈ size of human ‘phantom’

Residual Dose, Top Shielding

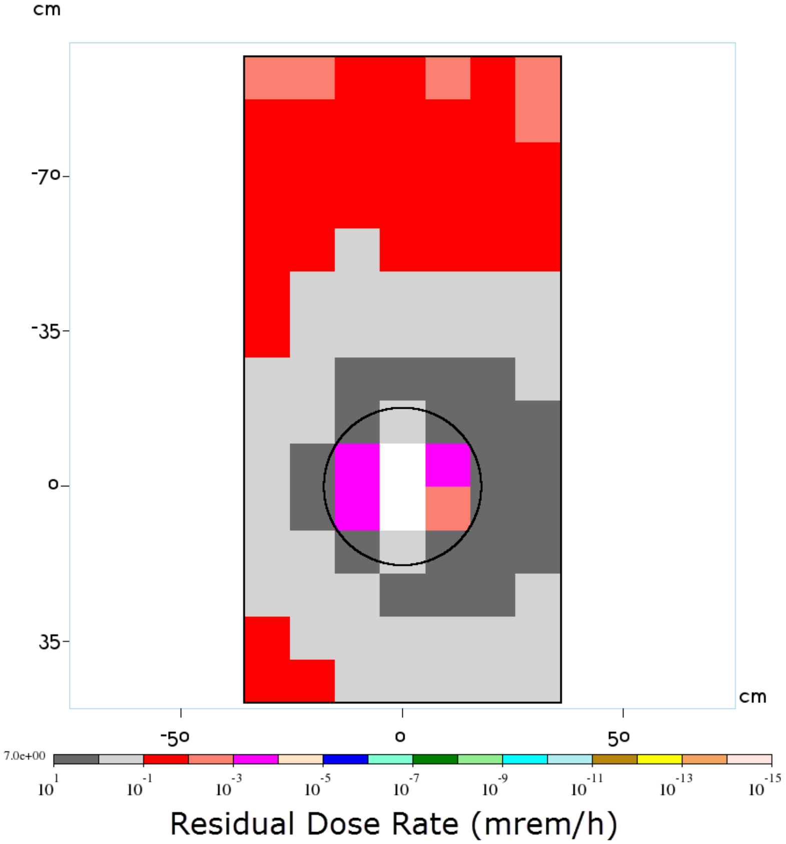

Residual Dose, Various Surfaces

	Peak Dose Rate [mrem/h]	Averaged Dose Rate [mrem/h]
Downstream	8.4	1.7
Upstream	0.44	0.15
Top	7.0	0.59
Bottom	1.7	0.41
Left	0.22	0.068
Right	0.72	0.35

- Streaming from the jaws through the pump hole – ≈50 mrem/h at 30 cm above the hole.
  Barrier around perimeter to prevent access.
- May move entire assembly to storage after 1 y
- Two closed-loop water systems in Linac:
  “Low Conductivity Activated” (LCA) for magnets;
  “Chilled Activated” for HVAC units.
- Total activity in jaws cooling water is small.
  Can use “Low Conductivity Activated” loop.

High Energy Beam Dumps

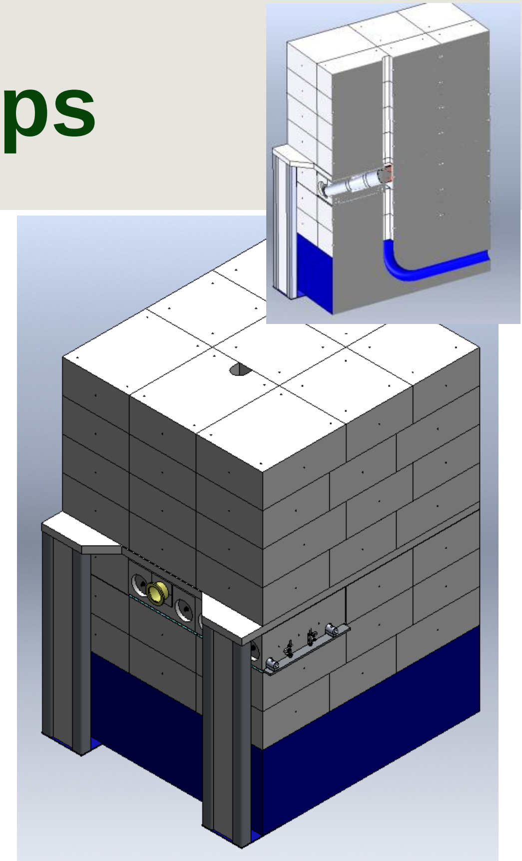

- Two dumps of same design (Folding Segment 2 (FS2), Beam Delivery System (BDS))
  - Concrete base, stacked steel (A36 type) shielding (10”-thick blocks), absorber assembly
  - Absorber (dump core) is air cooled, tungsten, copper fins
  - Designed for 135 W, 5% duty factor
  - Calculations for 18-O at 207 MeV/u (FS2) and 278 MeV/u (BDS)
  - Shielding size is based on residual activation, ground water activation and prompt dose

Residual Dose (BDS) Plan View

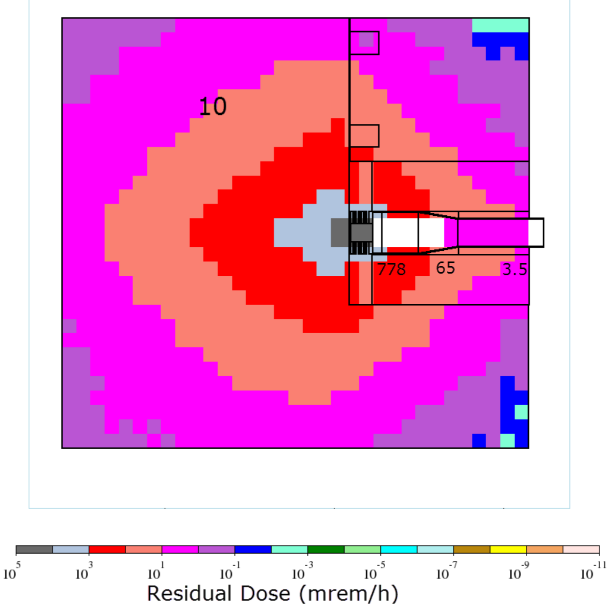

Soil Activation (BDS) Elevation View

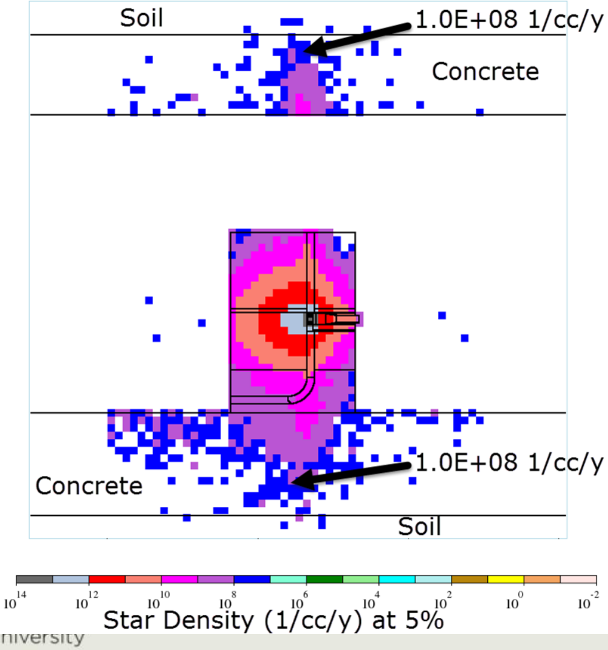

- Residual dose “30 d/1 d/0 cm” at shielding <10 mrem/h
- Maximum star density in soil $<10^8$ 1/cc/y
  - Max star density from 1 W/m losses is 10^9 1/cc/y (was close to limits)
  - ‘Geometry factor’ for 1 W/m losses is about 10 times larger than for dump
  - ≈100 times below drinking water limits

Low Energy Beam Dumps

- Similar designs, forced air cooling
  - Tungsten core and copper fins
  - 4”-thick top shielding for FS1a dump
  - 6”-thick top shielding for FS1b dump

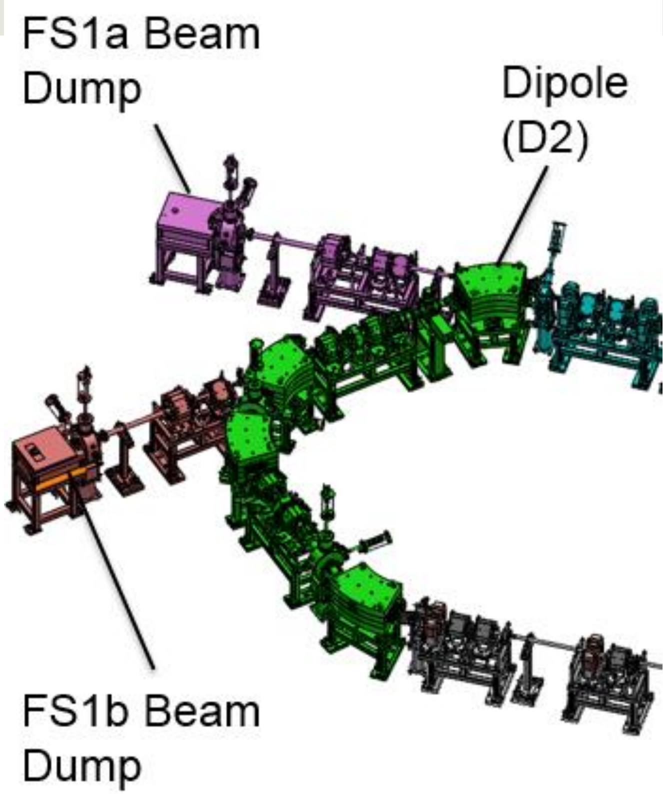

FS1a Dump

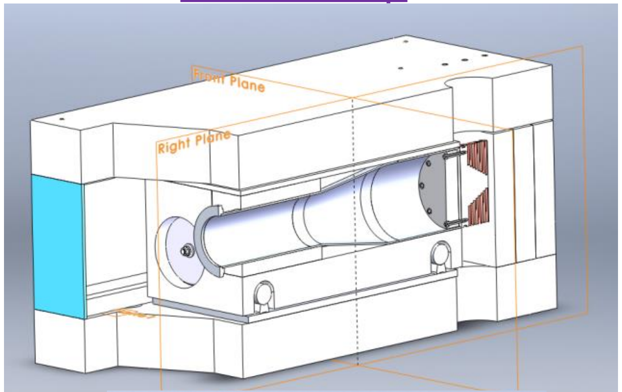

FS1b Dump

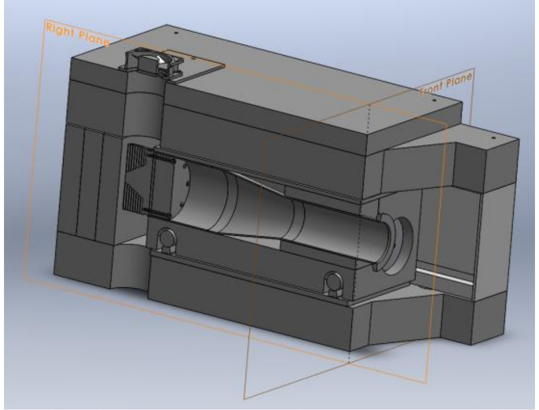

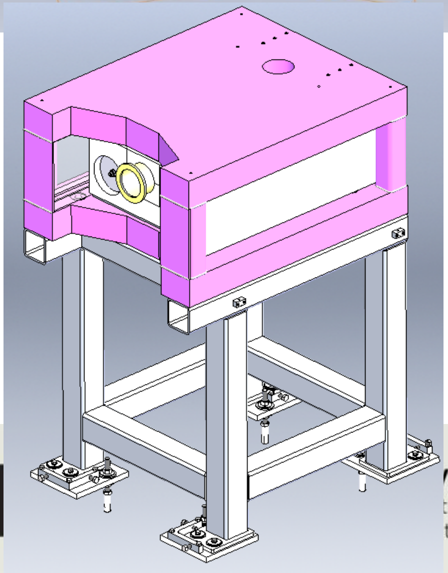

- Usage conditions
  - 16.5 to 20 MeV/u depending on beam
  - 15 W for FS1a dump, occupancy factor 5%. Will be used to tune up the linac segment #1.
  - 500 W for FS1b, used rarely (may be a few days a year). Will be used to study ion charge states after the stripper.

Low Energy Beam Dumps

- “30 d/1 d/0 cm”, 18-O at 20 MeV/u

Residual Dose Rates at FS1a Dump

Surface	$P_{\gamma\ max}$ (mrem/h)	$<P_\gamma>$ (mrem/h)
Top	1	0.09
Bottom	0.5	0.05
Upstream	0.1	0.008
Downstream	1.4	0.17
Side	0.15	0.015

Residual Dose Rates at FS1b Dump

Surface	$P_{\gamma\ max}$ (mrem/h)	$<P_\gamma>$ (mrem/h)
Top	9.07	1.81
Bottom	10.2	1.76
Upstream	0.93	0.21
Downstream	29.9	8.12
Side	4.30	0.74

Dose Rate at Side Shielding of FS1b Dump

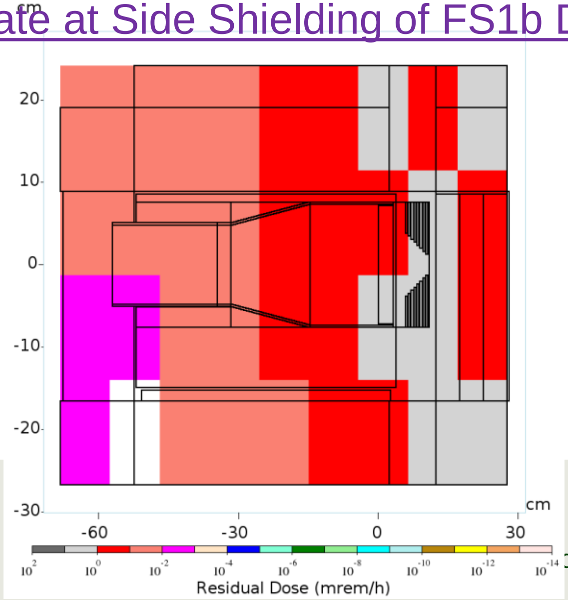

- Average dose rate at FS1a shielding is insignificant
- Average dose rate at FS1b shielding <10 mrem/h
- Open question – dose rate from bare cores

Dose Rate from Bare Dump Cores/Absorbers

- Dose rate can be as high as a few hundred mrem/h at 30 cm (“High Radiation Area”)
  - Will impact how we replace, handle, store (decay) and dispose absorbers
  - There is a concept how to handle absorbers (under discussion)
  - There is desire to manage dump operations to keep activation low, or replace often

278.5 MeV/u 18-O, 135 W
720 h irradiation
4 h cooling

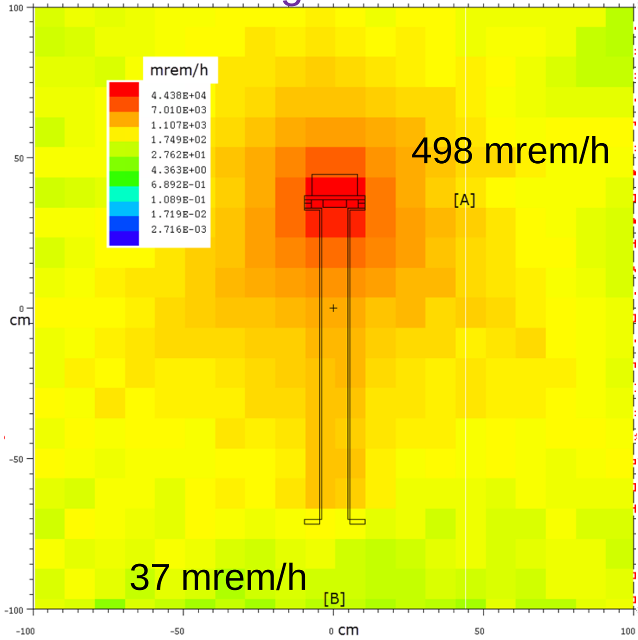
498 mrem/h

37 mrem/h

278.5 MeV/u 18-O, 135 W
900 h irradiation
24 h cooling

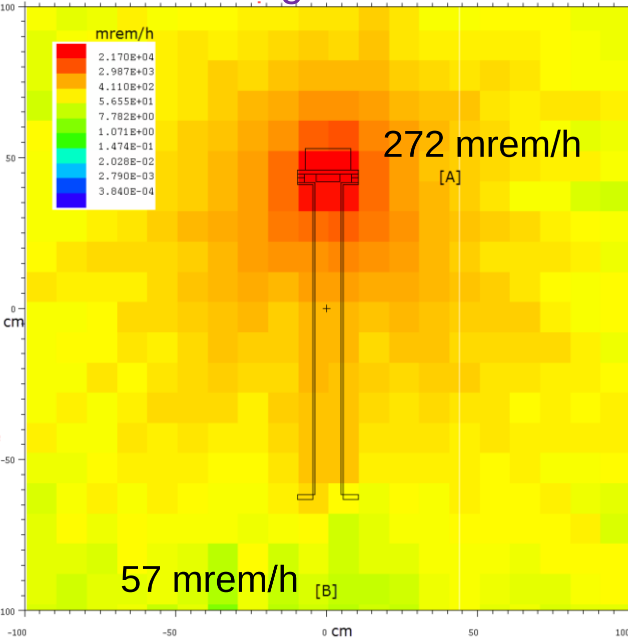
272 mrem/h

57 mrem/h

207.1 MeV/u 18-O, 135 W
100 h irradiation
24 h cooling

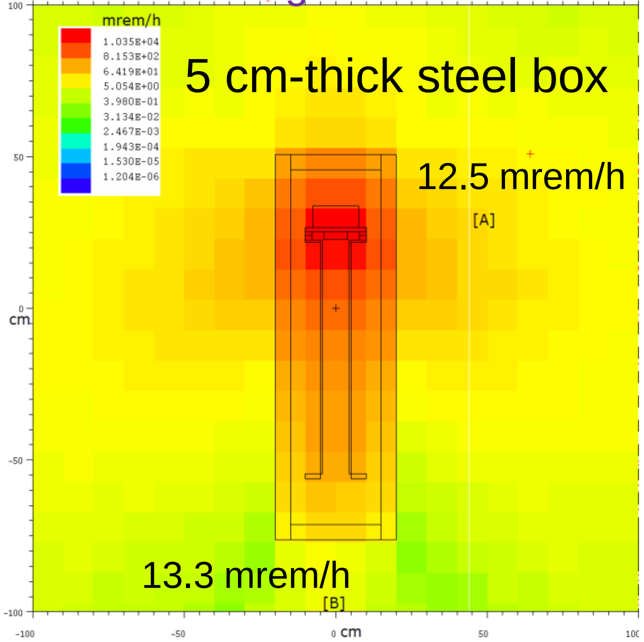
5 cm-thick steel box

12.5 mrem/h

13.3 mrem/h

Beam Dump Absorber Removal Procedure

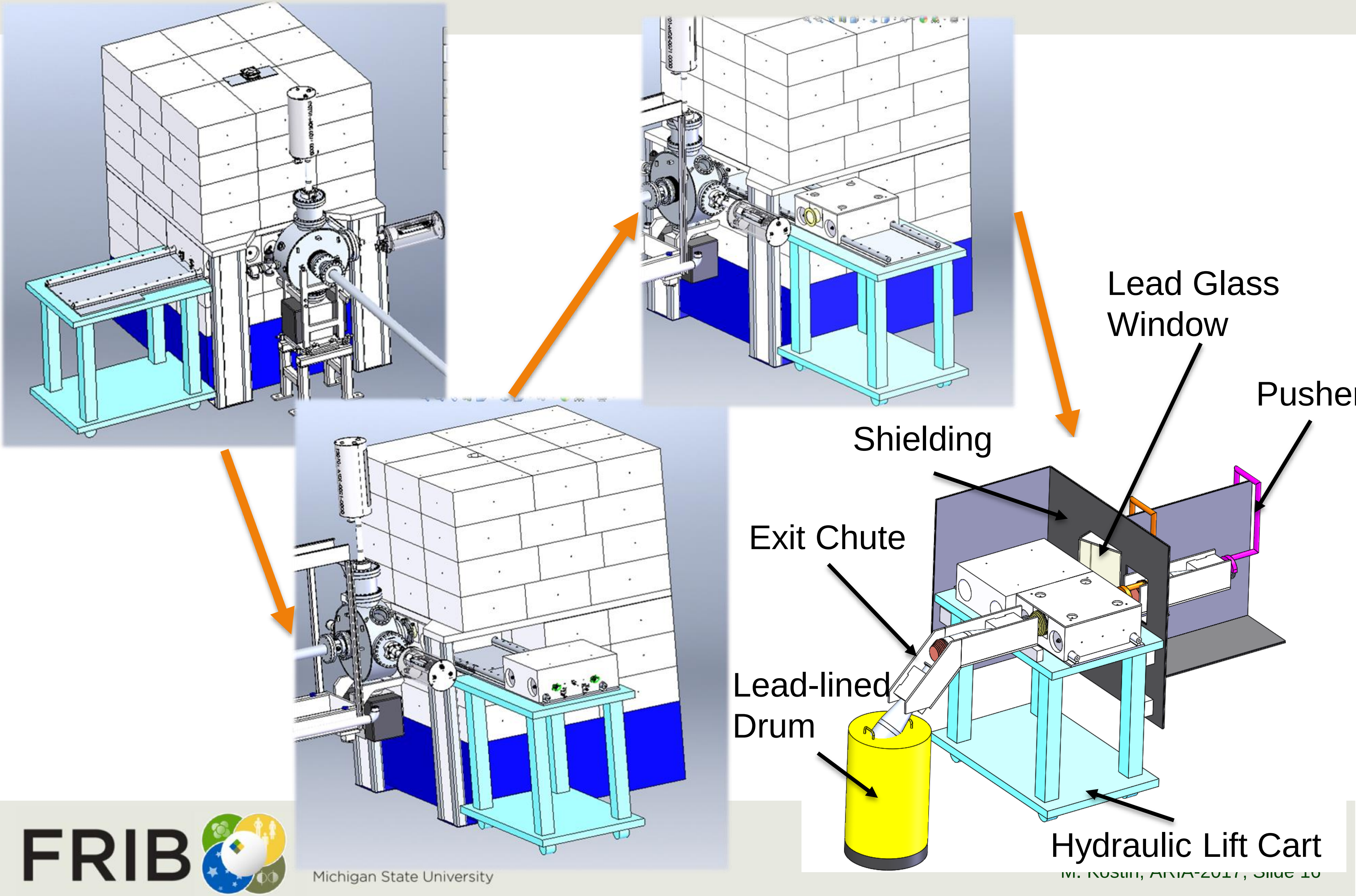

Michigan State University

Beam Dump Absorber Removal Procedure

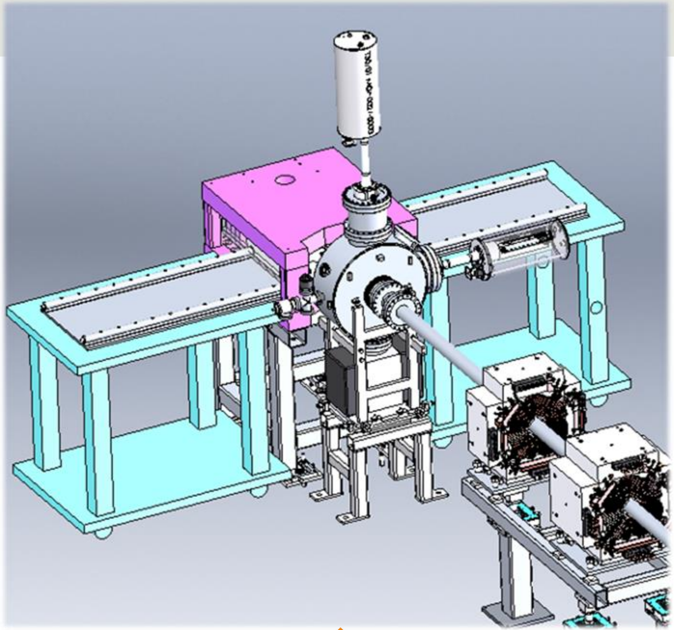

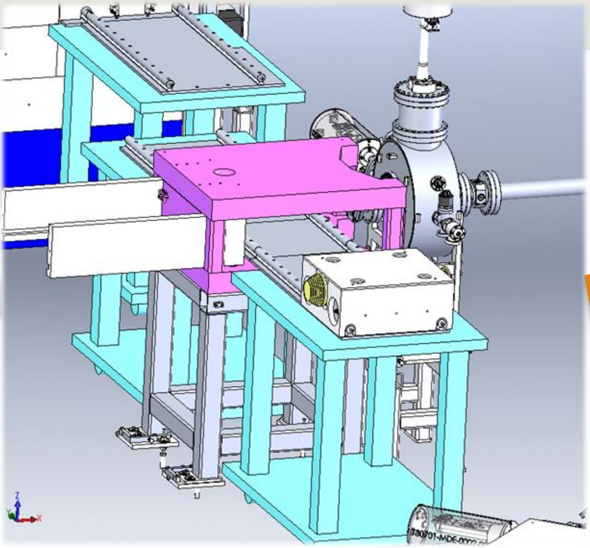

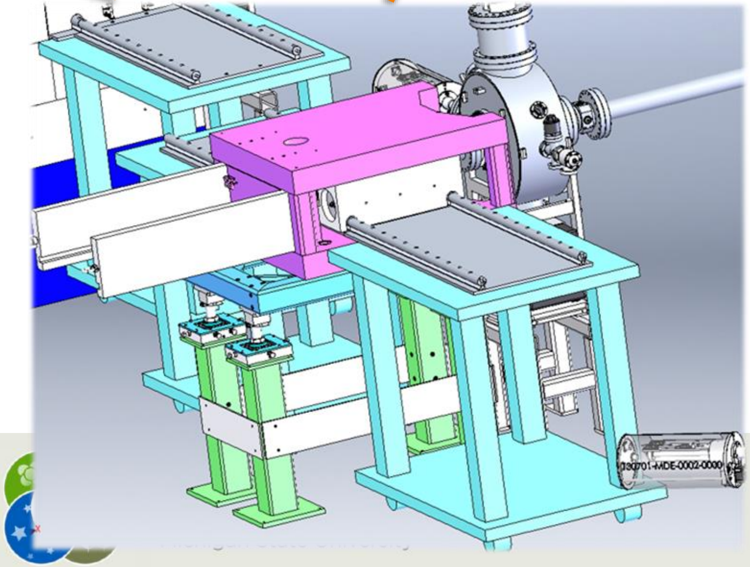

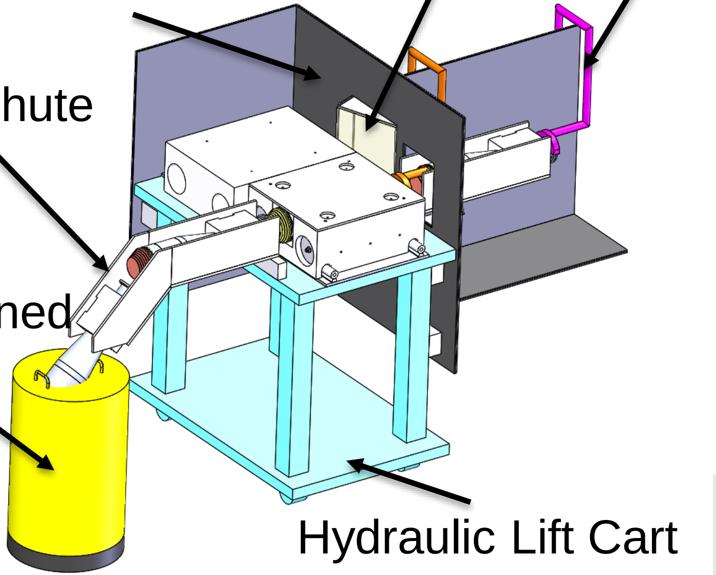

Lead Glass Window

Pushe

Shielding

Exit Chute

Lead-lined Drum

Hydraulic Lift Cart

Staging the Spent Material

- A few potential areas for staging the spent material inside the linac tunnel
  - Spent material will be staged to cool down
  - Some material can be reused after cool down and
    some will be removed from the linac tunnel depending upon the dose rate
- Removed components will be placed in casks for transportation on public roads, and removed from the facility
- Removal from the facility in the next talk (Dali Georgobiani)

Last Slide

- Reviewed residual activity of high-loss beam devices in the FRIB linac
- Lithium stripper
  - Expected dose rate will be at a few tens mrem/h – “Radiation Area”
  - There will be no local shielding for the device, will use movable screens instead
- Charge selection device
  - Temporary device (up to 10% of full power) was designed
  - Residual dose rate from the shielding <2 mrem/h
  - Expected to be moved as a whole into storage after approximately one year
- Low energy beam dumps (FS1 – “Folding Segment 1”)
  - FS1a – dose rate is negligible due to low beam power of 15 W
  - FS1b – dose rate from shielding approaches 10 mrem/h, can be lower due to shorter operational time and usage of heavier beams
- High energy beam dumps
  - Folding Segment 2 dump (FS2) and Beam Delivery Systems dump (BDS) have identical design
  - Shielding was designed to have residual dose rate <5 mrem/h
  - Dump cores will be activated at level of several hundred mrem/h
- Dump handling concept developed
- Removal of spent components from facility with other active waste (next talk)

Backup Slides

- Backup slides

Beam Dump Absorber Removal Procedure

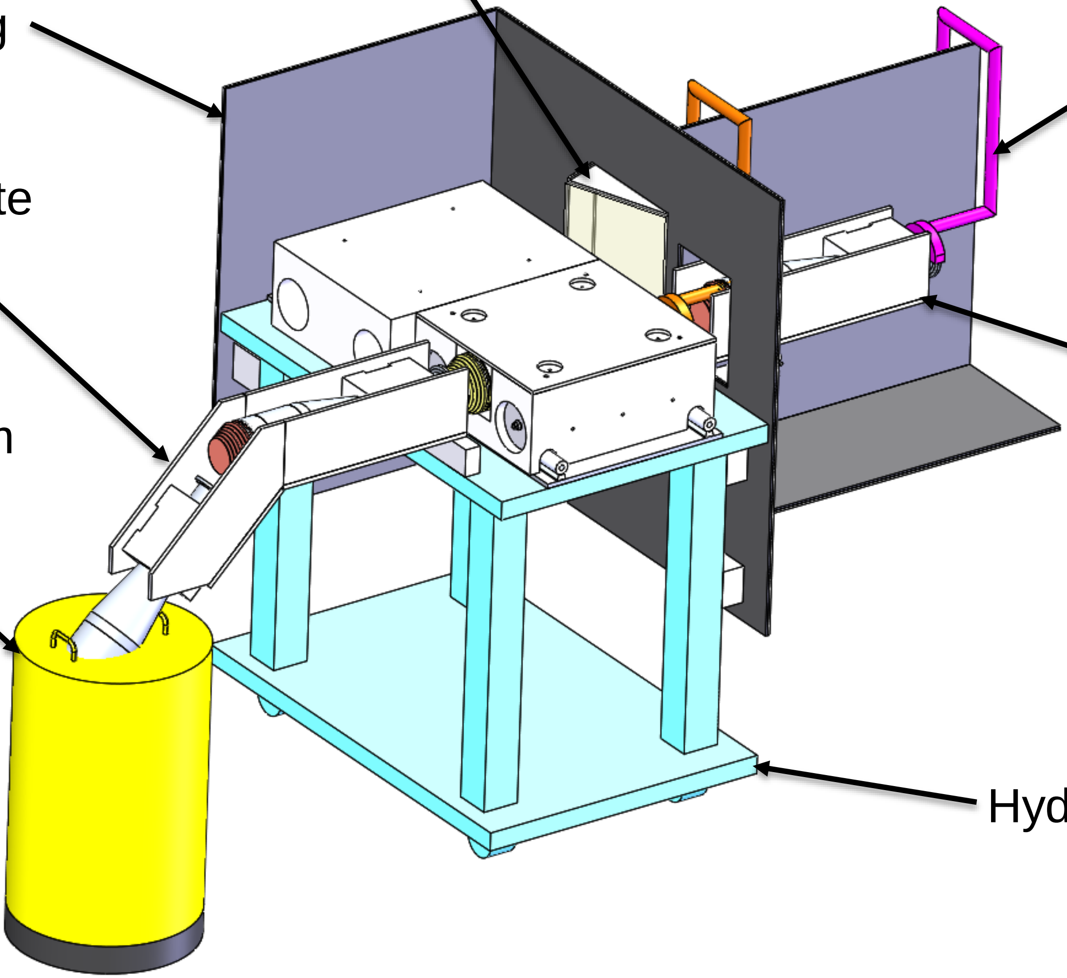

Models for FS1a and FS1b [1]

- Based on most recent SolidWorks models
- FS1a and FS1b are slightly different (tungsten core and shielding)

FS1a

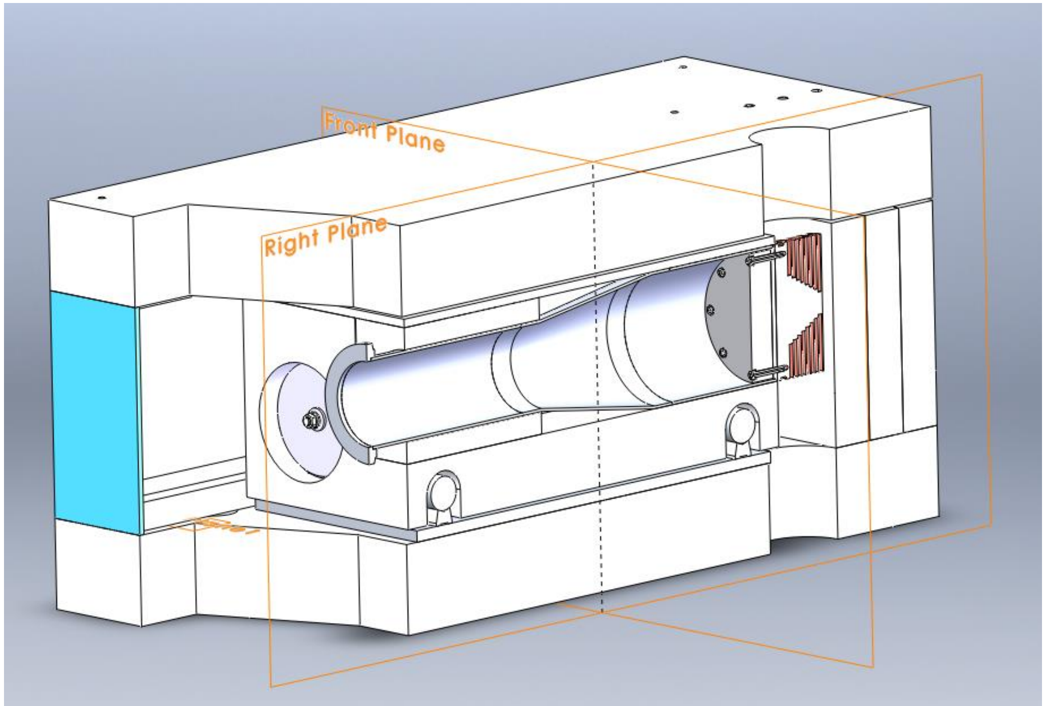

FS1b

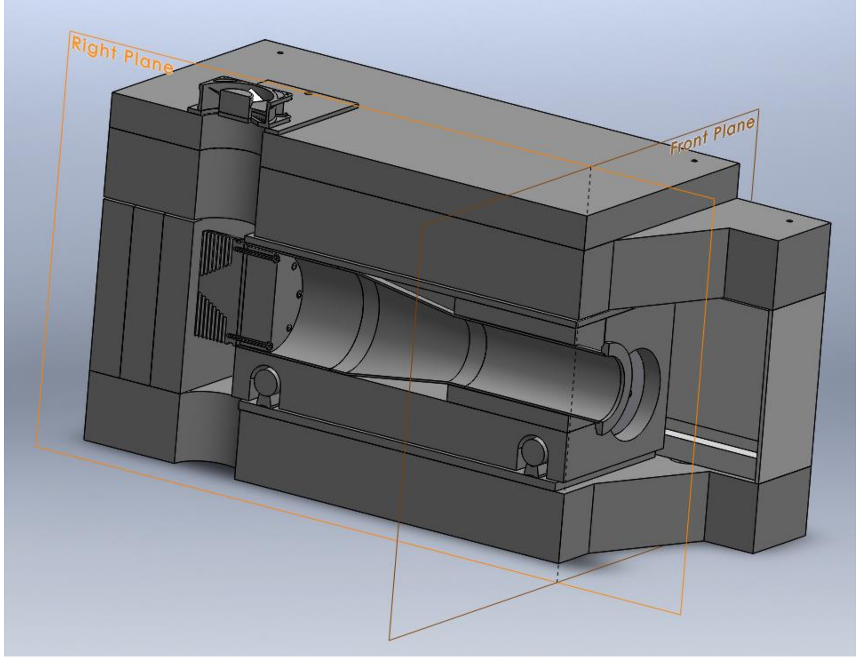

Accelerator Beam Dump Manufacturing

Absorber Assemblies Completed at ANL

Absorber assemblies completed

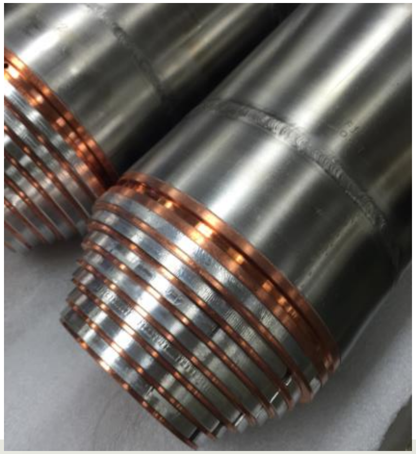

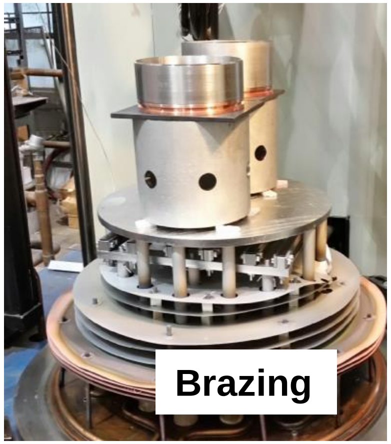

Brazing

CU-W absorber subassembly ready for final welding of beam tubes

The stainless body components and tungsten absorber plates after machining

Accelerator Beam Dumps Manufacturing

- Received all four beam dump absorber assemblies from ANL
- All the parts for FS1a and FS1b beam dumps are on order
- Received the partial delivery of FS1 beam dumps parts. Rest of the parts are expected to be delivered by the end of next week

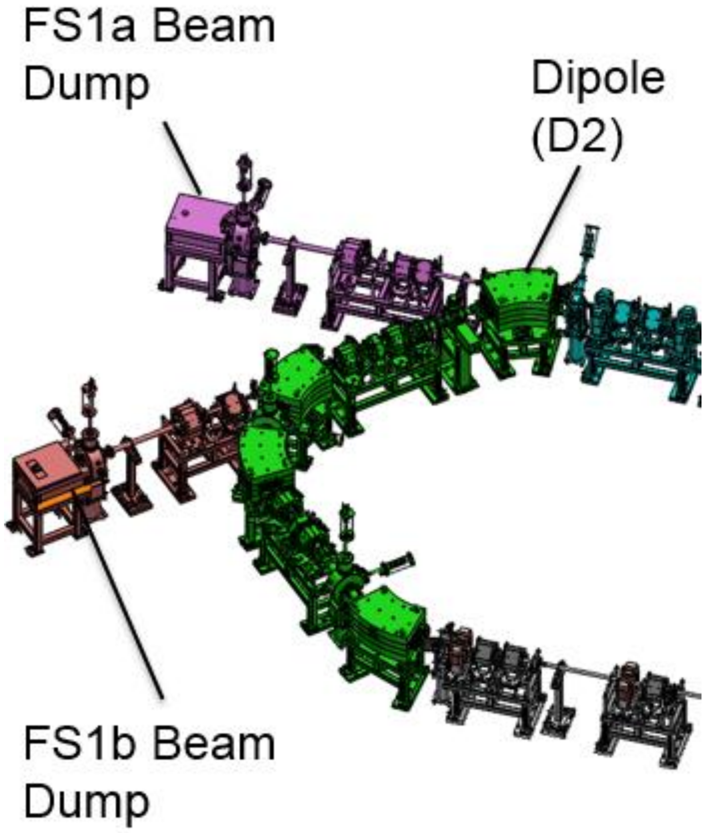

FS1 beam dumps layout

Beam dump absorber assemblies

FS1 beam dump stands

Simple Stationary Absorber Design CAD: Tungsten Stop and Heat Sink

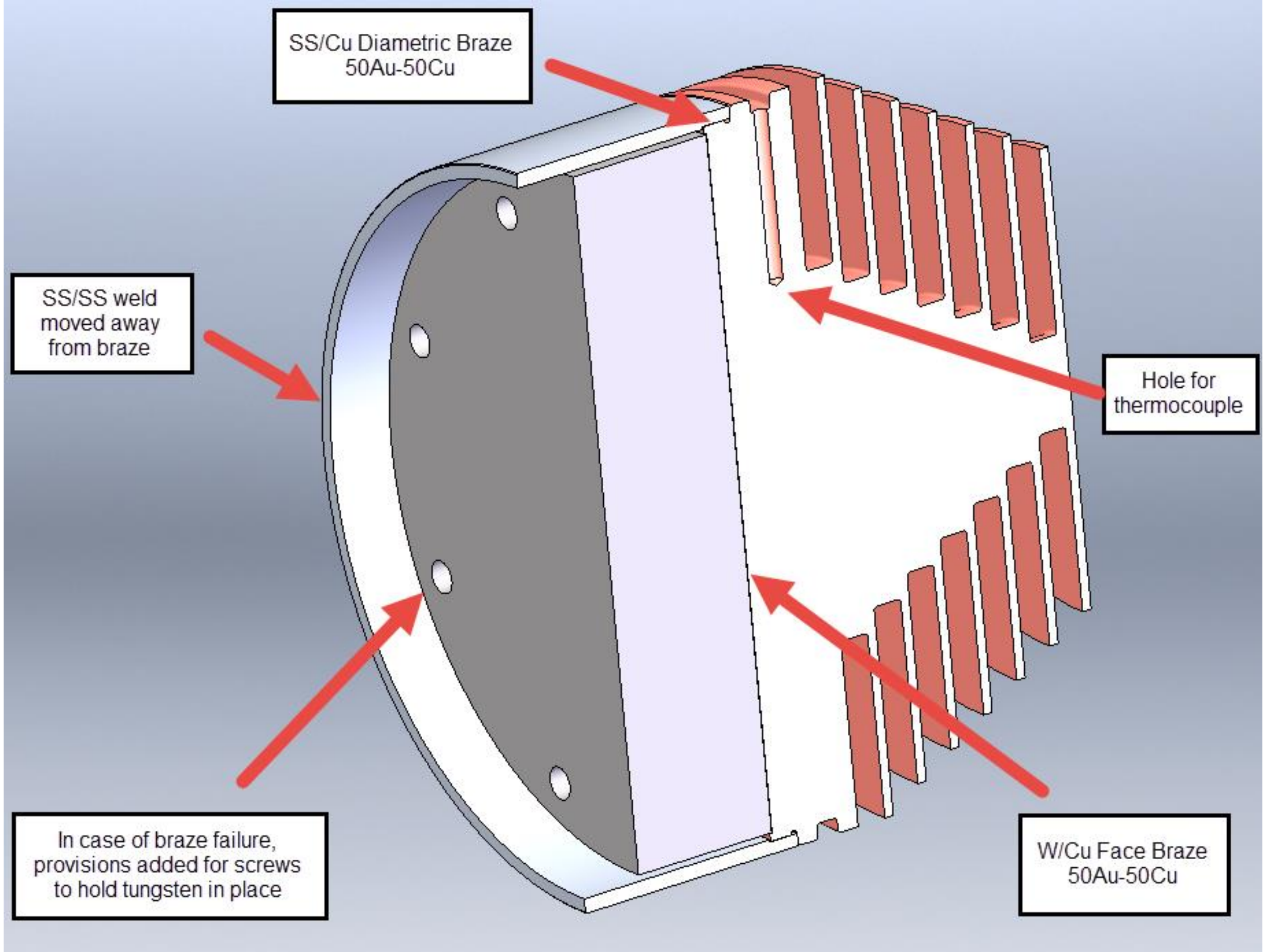

Tungsten Stop:
1.25” Thick
5.66” OD

SS Tube:
6” OD x .120” Thick

Simple Stationary Absorber Design CAD: “Service Length” with Quick Disconnect Interface

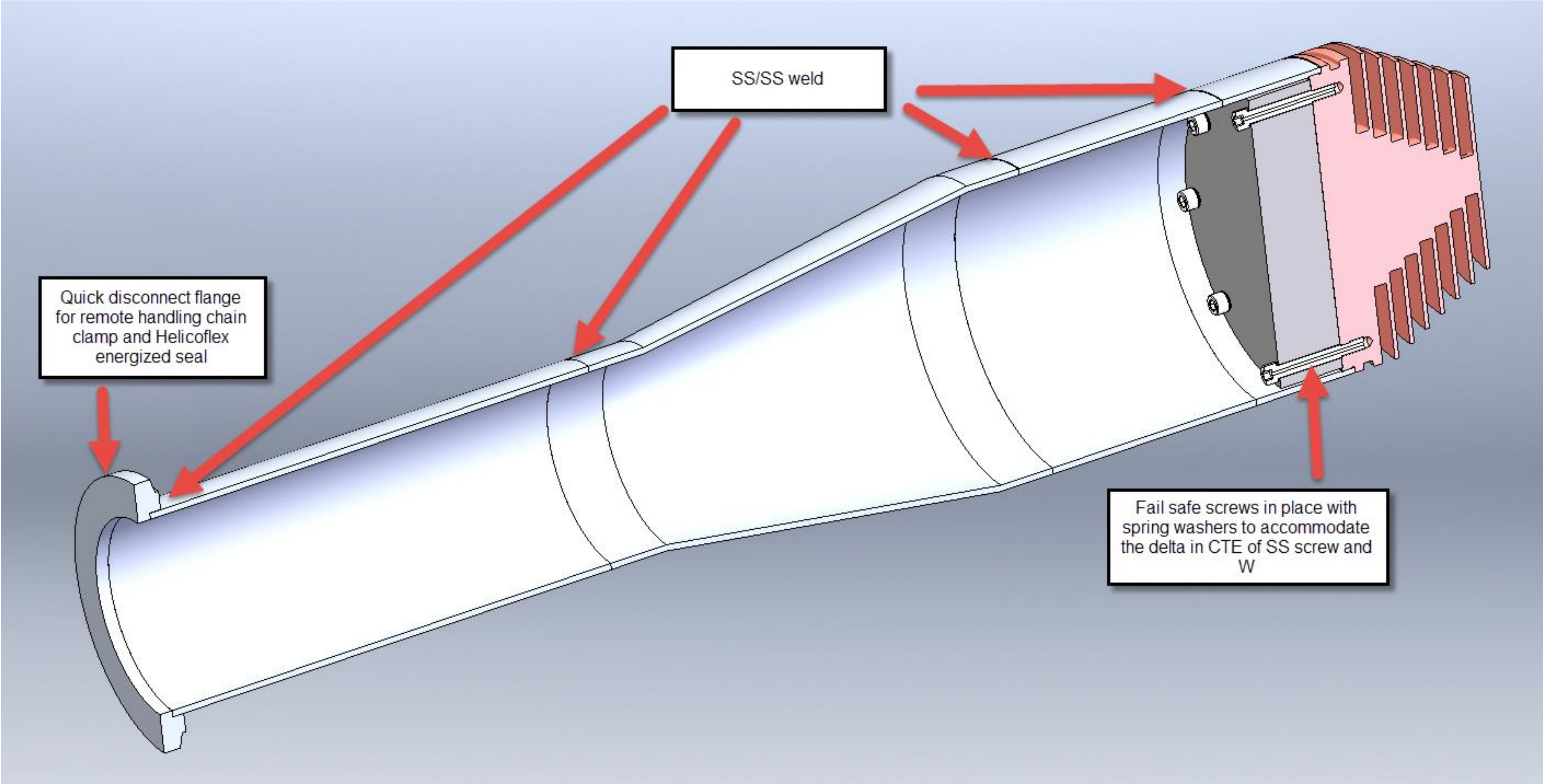

SS/SS weld

Quick disconnect flange for remote handling chain clamp and Helicoflex energized seal

Fail safe screws in place with spring washers to accommodate the delta in CTE of SS screw and W

Service Length: 27” long, 6” OD tube transitions to 4” OD

Shielding Design- Low Energy

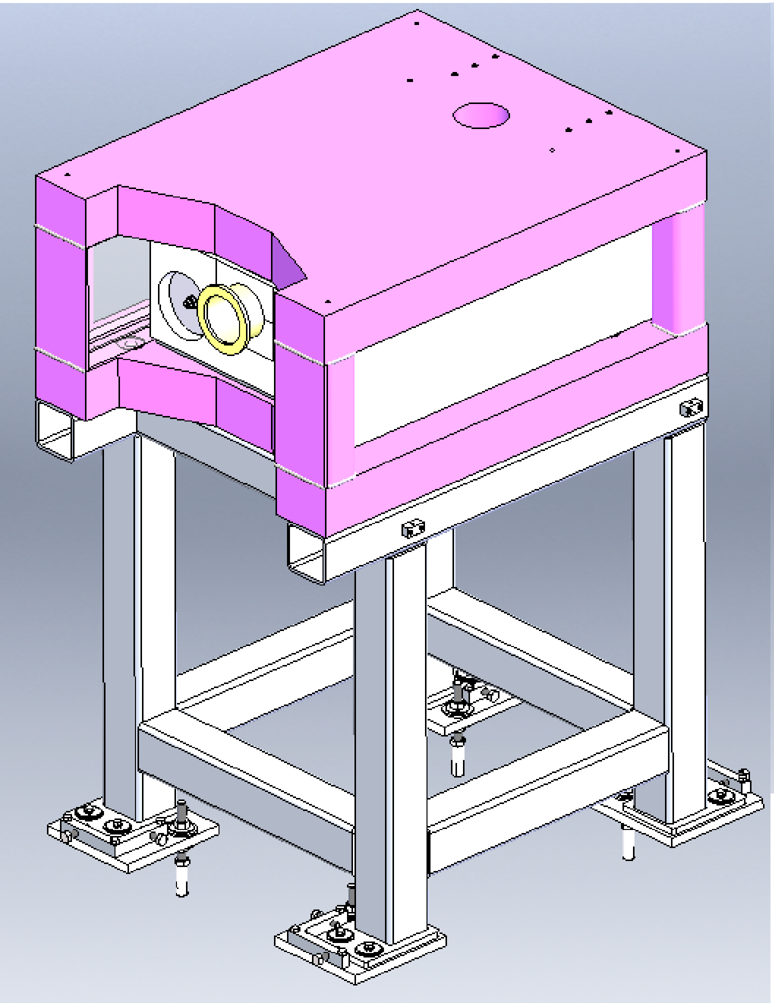

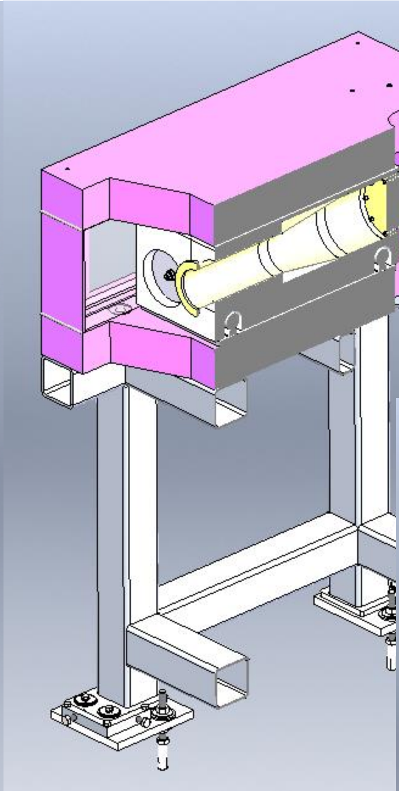

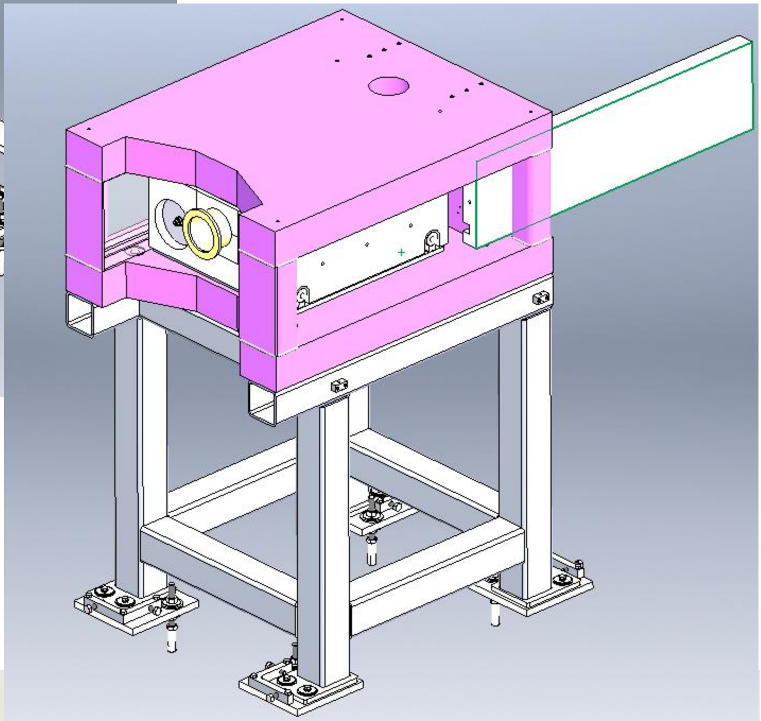

Features:

- Cooling Chimney
- Service “Doors”

Shielding Design- Low Energy Rear Views

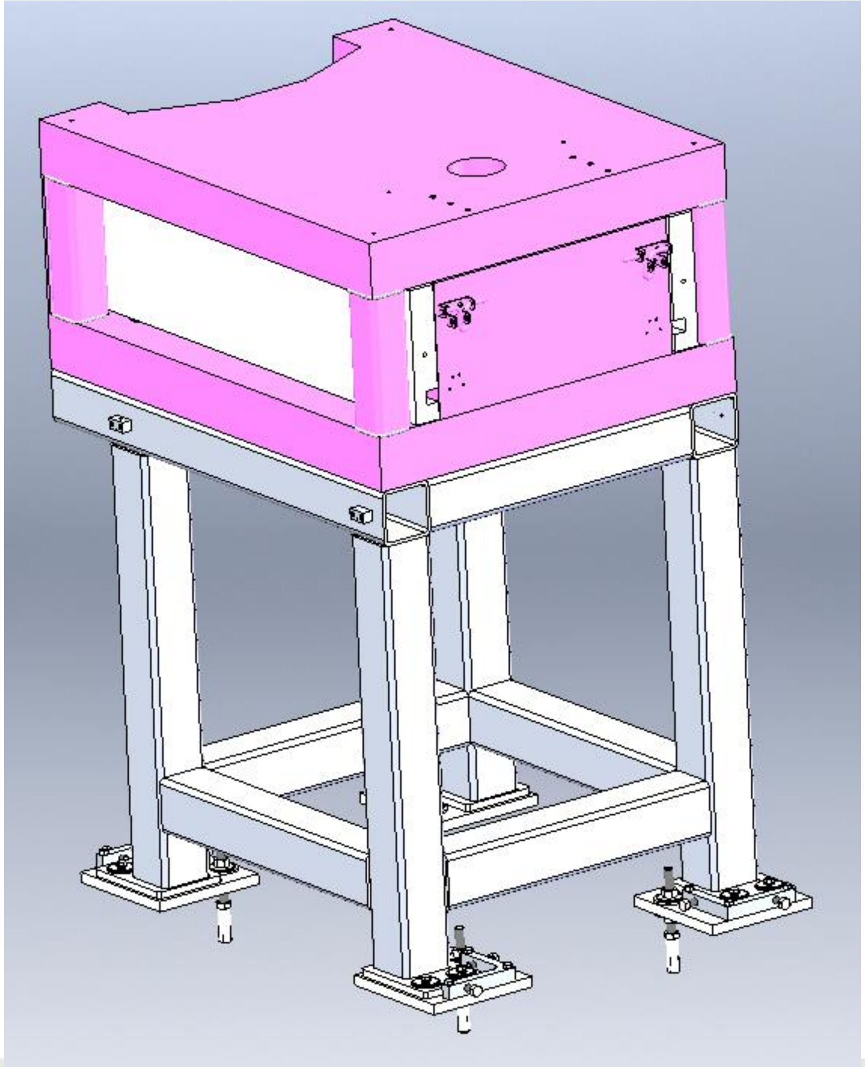

Features:

- Latches with lock out to hold doors closed
- Latches can be used to hold door open in service position

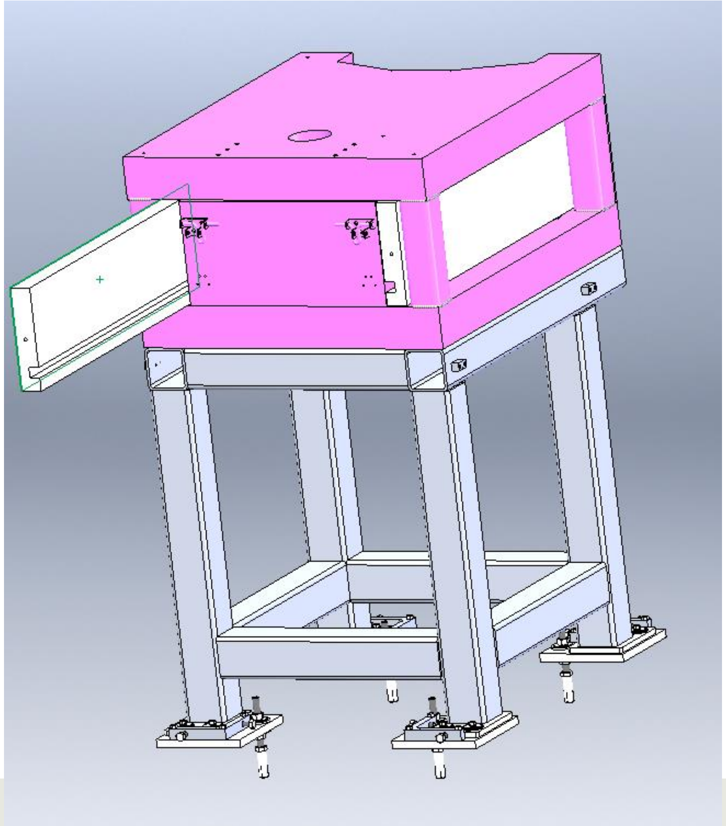

Shielding Design- Main Components Dump Absorber Shielding Cart

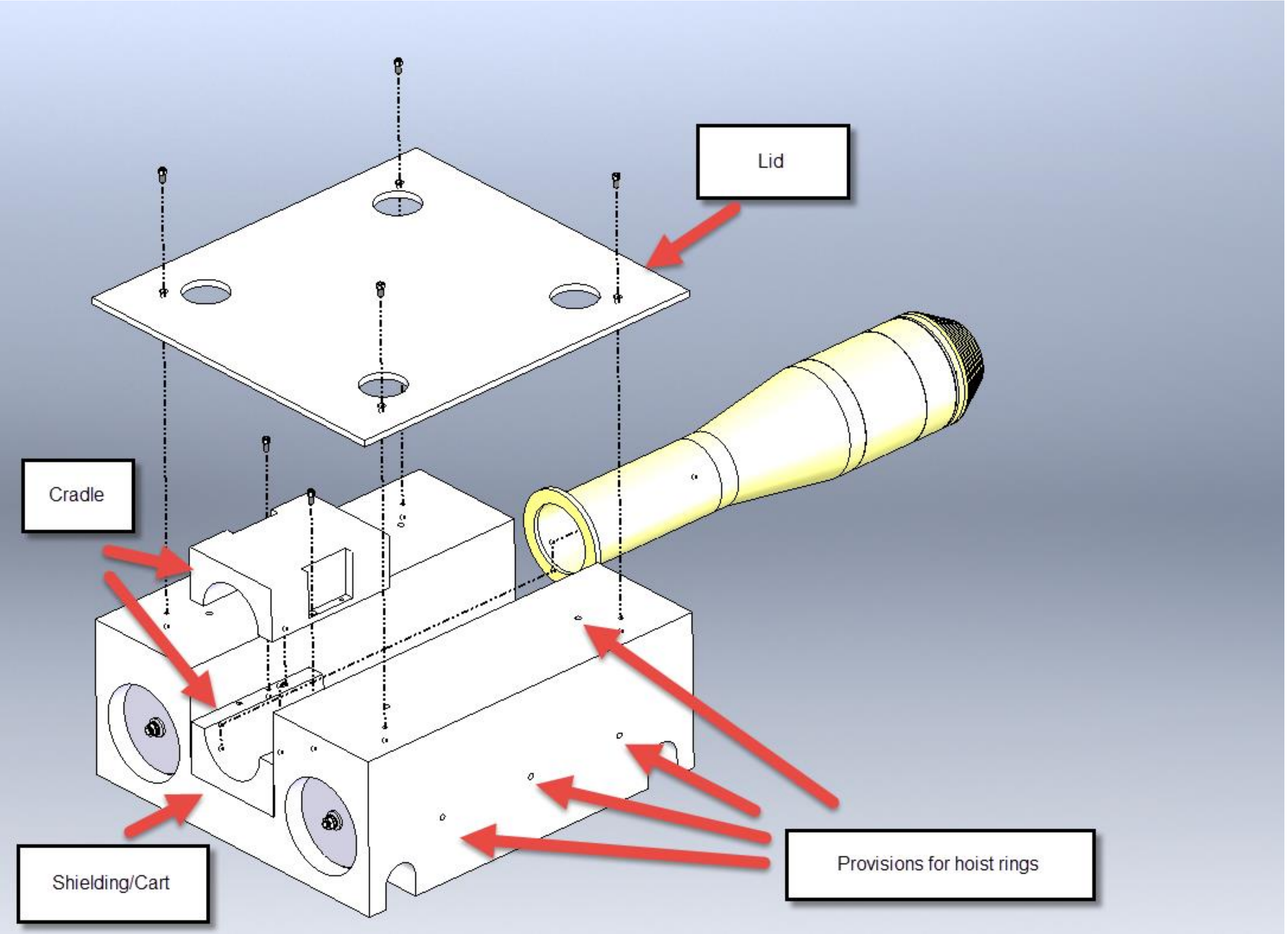

Details:

- 1000 lbs
- A36 steel painted
- Rides on rails
- Cradle can be changed out for different shielding requirements/ lengths or materials

Shielding Design- Main Components Railways

Details:

- Ordered at length
- Dowel and mating clearance hole ends
- Used inside shielding and on service carts

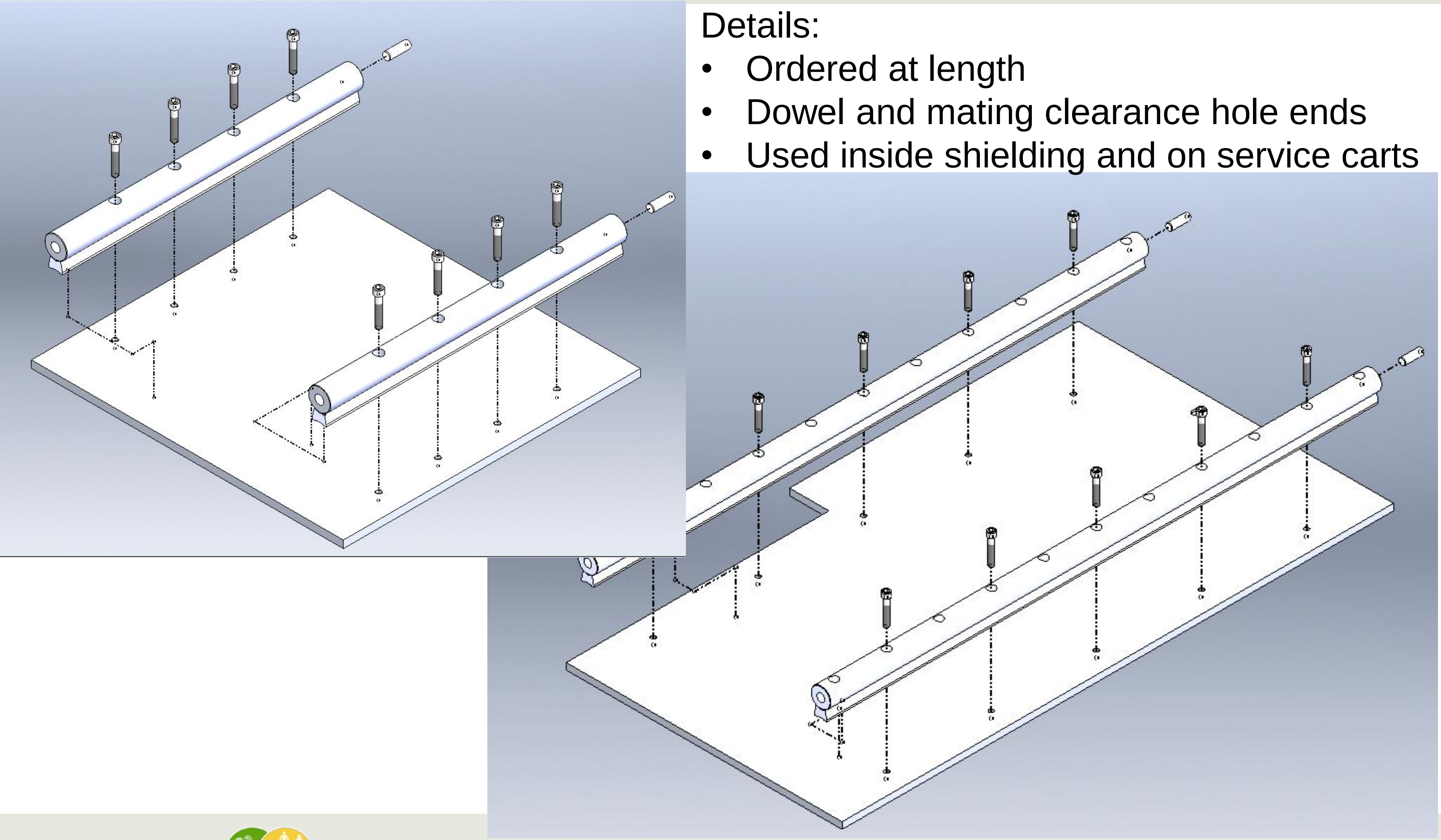

Shielding Design- Main Components Low Energy Stand

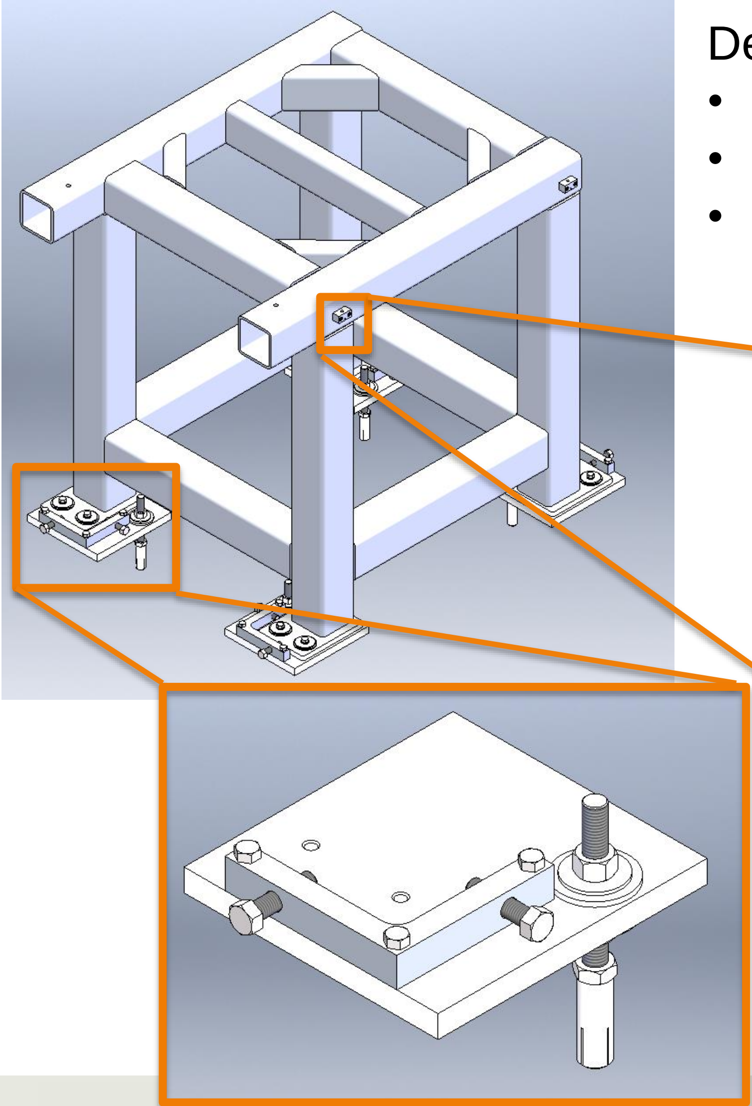

Details:

- Square tube frame/table
- Leveling feet with integrated x-y adjustment
- Fiducial mounts for pre-surveying and leveling of table

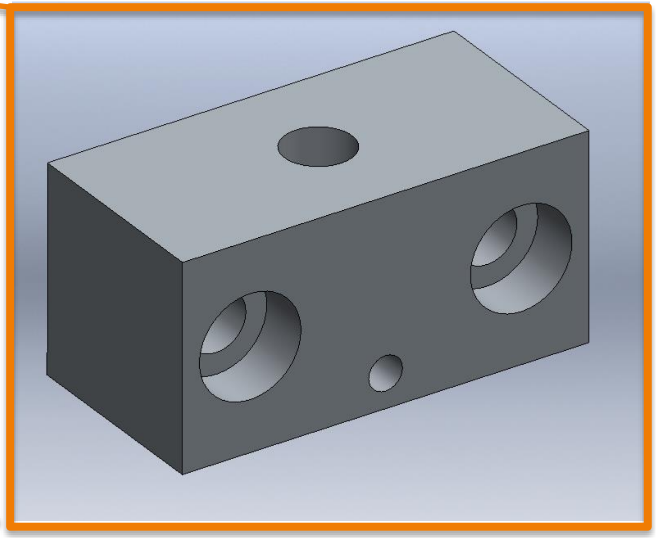

Shielding Design- Main Components Low Energy Shielding and “Doors”

Details:

- Welded Shielding Housing (A36) painted
- Downstream shielding that can be changed out with different material or geometry
- Ball Transfers integrated in to assist in rolling open the doors for service
- Latches for side doors for closed and service positions

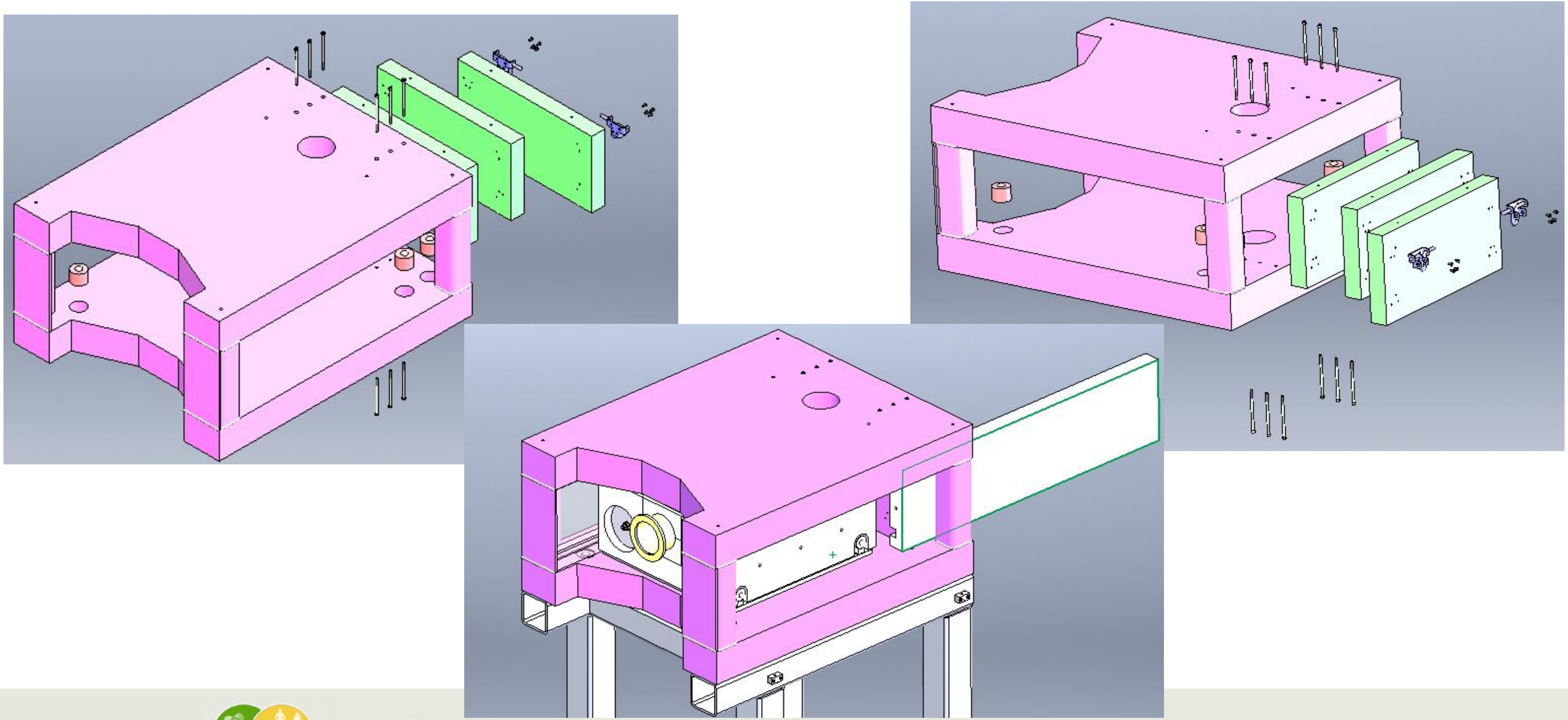

FRIB Overview

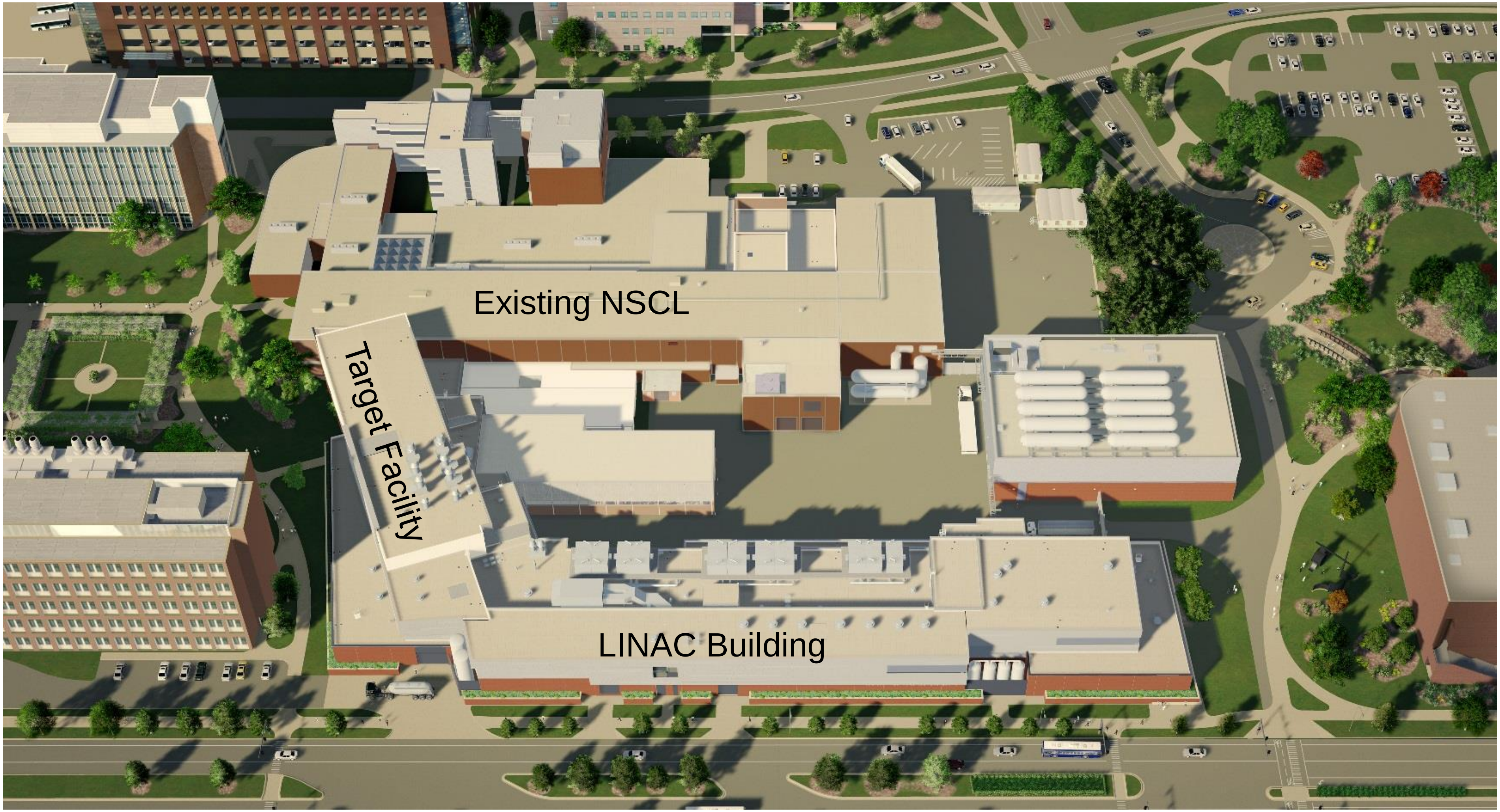

FRIB – Four Science Themes

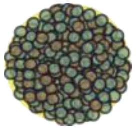

Properties of nuclei

- Develop a predictive model of nuclei and their interactions
- Many-body quantum problem: intellectual overlap to mesoscopic science, quantum dots, atomic clusters, etc.

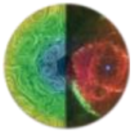

Astrophysical processes

- Origin of the elements in the cosmos
- Explosive environments: novae, supernovae, X-ray bursts …
- Properties of neutron stars

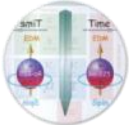

Tests of fundamental symmetries

- Effects of symmetry violations are amplified in certain nuclei

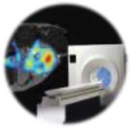

Societal applications and benefits

- Bio-medicine, energy, material sciences, national security

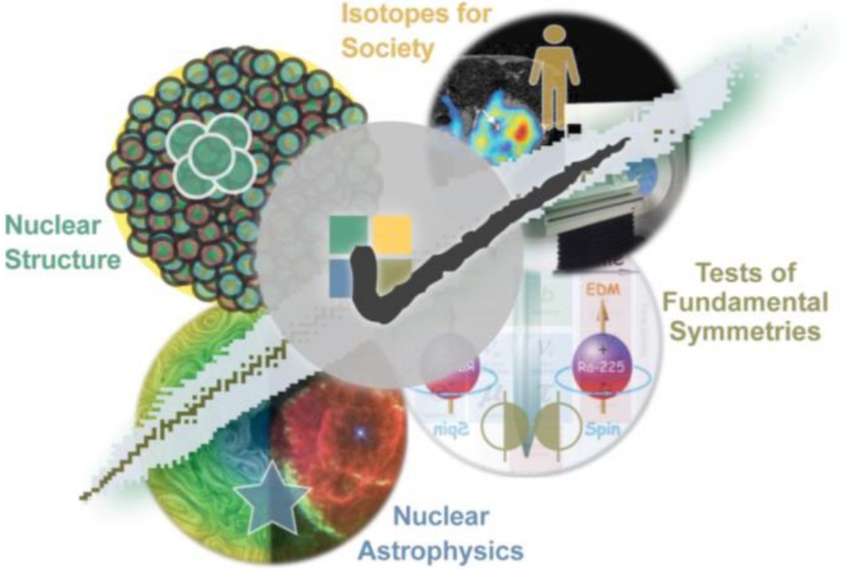

FRIB Beams Will Enable New Discoveries

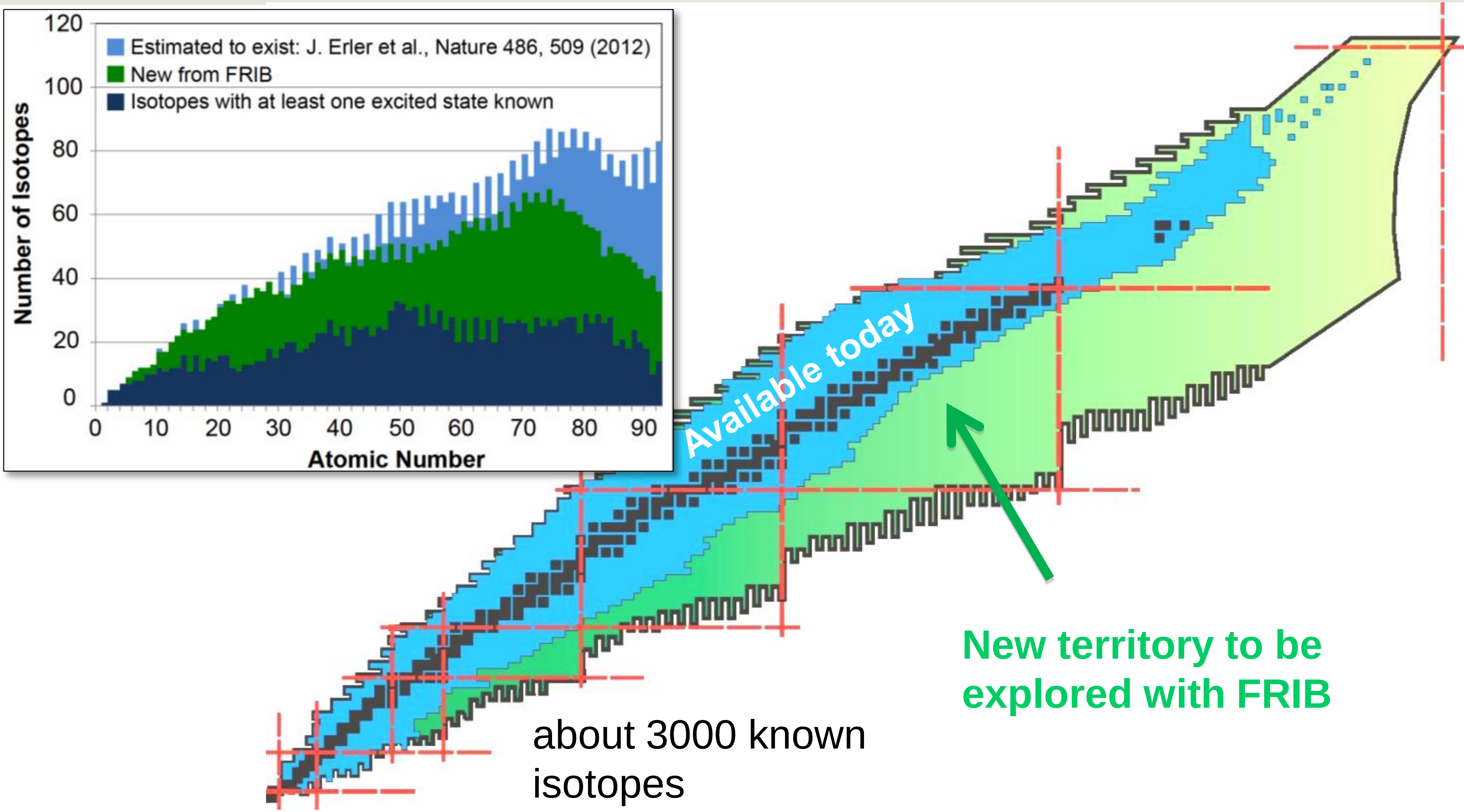

about 3000 known isotopes

New territory to be explored with FRIB

Regulatory Requirements and Design Goals

Target Receptor	**Limits and Goals**	
Radiation Dose - **Worker**	Standard [a]: 5000 mrem/yr MSU ALARA Goal: 500 mrem/yr [c]	
Radiation Dose - **Public**	Standard [a]: 100 mrem/yr and 2 mrem/(any one hour) MSU ALARA Goal [c]: 10 mrem/yr and 2 mrem/(any one hour)	
Air – maximum exposure to nearest public receptor	Standard [a]: 10 mrem/yr[f]	
Soil and Groundwater [d] (*in situ*, no decay reduction factor)	^{3}H Water Effluent Regulatory Limit [a]: 1,000 pCi/ml Design Goal: 20 pCi/ml (drinking water standard [b])	^{22}Na Water Effluent Regulatory Limit [a]: 6 pCi/ml Design Goal: 0.4 pCi/ml (drinking water standard [b])
Waste Water [e]	^{3}H Standard [a]: 10,000 pCi/ml	^{22}Na Standard [a]: 60 pCi/ml

a. Standard refers to 10 CFR 20 (Nuclear Regulatory Commission) limits.

b. Standard refers to 40 CFR 141 (Environmental Protection Agency) limits for drinking water from community water systems.

c. Some conservative self-imposed goals are used to provide flexibility in the design, commissioning, and operation of FRIB and accommodate future upgrades or changes in mission. The ALARA Goals represent internal action levels for FRIB and the University as a precursor for ES&H to assure that regulatory limits are not exceeded.

d. Activated soil and groundwater is being evaluated using drinking water limits as an FRIB design goal to assure that there are no negative impacts for water that may migrate to the underground aquifer. The point of compliance for groundwater will be established at the closer of a) nearest potential unrestricted access to the location or b) region containing 99.9 percent of the potentially activated soil. The actual point of compliance will be set following CD-3b. Of the activated material in the soil and groundwater, the limiting radionuclides are ^{3}H and ^{22}Na.

e. Waste Water is being evaluated using limits for release to the sanitary sewer.

f. To implement the ALARA requirements of 20.1101 (b) a constraint on air emissions of radioactive material to the environment shall not cause an individual member of the public to receive a dose of 10 mrem TEDE per year from these emissions. (See 20 CFR 20.1101 (b) for specific requirement. No additional ALARA goals are established for air emissions based on the NRC ALARA requirements.

Matrix for Residual Activation of Steel Shielding (48-Ca at 20 MeV/u)

- [Re]-Normalization for various irradiation and cooling times (based on common radionuclides decay curves)

T_{cool}	T_{irrad} [day]						
	0.5	**1**	**5**	**30**	**100**	**365**	**7300**
1sec	5.59E-02	5.85E-02	6.33E-02	7.00E-02	7.79E-02	8.75E-02	1.00E-01
1min	5.41E-02	5.67E-02	6.15E-02	6.82E-02	7.61E-02	8.57E-02	9.86E-02
10min	4.90E-02	5.15E-02	5.62E-02	6.30E-02	7.09E-02	8.05E-02	9.34E-02
0.5hr	4.28E-02	4.52E-02	4.97E-02	5.66E-02	6.44E-02	7.42E-02	8.70E-02
1hr	3.63E-02	3.85E-02	4.28E-02	4.99E-02	5.76E-02	6.75E-02	8.03E-02
2hr	2.72E-02	2.91E-02	3.31E-02	4.04E-02	4.81E-02	5.80E-02	7.08E-02
4hr	1.52E-02	1.66E-02	2.03E-02	2.79E-02	3.55E-02	4.58E-02	5.88E-02
6hr	9.80E-03	1.09E-02	1.44E-02	2.20E-02	2.92E-02	3.95E-02	5.24E-02
12hr	2.63E-03	3.38E-03	6.37E-03	1.42E-02	2.05E-02	3.17E-02	4.45E-02
1day	7.50E-04	1.33E-03	3.69E-03	1.16E-02	1.74E-02	2.91E-02	4.19E-02
2days	5.06E-04	9.62E-04	2.94E-03	1.04E-02	1.61E-02	2.78E-02	4.05E-02
7days	2.68E-04	5.23E-04	1.82E-03	7.44E-03	1.27E-02	2.42E-02	3.69E-02
30d	7.78E-05	1.54E-04	6.67E-04	3.42E-03	7.61E-03	1.84E-02	3.04E-02
0.5yr	2.33E-05	4.66E-05	2.29E-04	1.34E-03	3.70E-03	1.10E-02	1.96E-02
1yr	1.45E-05	2.89E-05	1.42E-04	8.38E-04	2.35E-03	7.13E-03	1.28E-02
2yr	6.29E-06	1.26E-05	6.19E-05	3.65E-04	1.03E-03	3.14E-03	5.71E-03
5yr	5.57E-07	1.11E-06	5.49E-06	3.24E-05	9.16E-05	2.80E-04	5.38E-04
10yr	1.44E-08	2.87E-08	1.42E-07	8.43E-07	2.52E-06	8.22E-06	4.03E-05
20yr	3.75E-09	7.50E-09	3.75E-08	2.25E-07	7.46E-07	2.71E-06	2.64E-05
30yr	3.22E-09	6.44E-09	3.22E-08	1.93E-07	6.41E-07	2.33E-06	2.28E-05

Radiologically Bounding Beam

- Applies to activation, not to damage to jaws (dpa)

Beam	I [1/s]	F_n^1 [1/cm2/s]	F_n^2 [1/cm2/s]	F_n^3 [1/cm2/s]	P_γ [mrem/h]	F_n^1 (^{48}Ca) / F_n^1	F_n^2(^{48}Ca) / F_n^2	F_n^3 (^{48}Ca) / F_n^3	P_γ(^{48}Ca) / P_γ
^{238}U	3.97E+11	1.29E+06	3.91E+05	3.99E+05	2.96E-02	12.49	31.13	31.58	41.15
^{48}Ca	8.78E+11	1.61E+07	1.22E+07	1.26E+07	1.22E+00	1.00	1.00	1.00	1.00
^{78}Kr	5.40E+11	6.78E+06	4.94E+06	5.06E+06	5.17E-01	2.37	2.47	2.49	2.35
^{124}Xe	7.27E+11	6.06E+06	4.80E+06	5.18E+06	2.41E-01	2.65	2.54	2.44	5.05
^{18}O									
^{86}Kr	4.89E+11	7.85E+06	5.94E+06	5.99E+06	5.37E-01	2.05	2.05	2.11	2.26
^{16}O									
^{36}Ar									

- Compare
  - Neutron fluxes calculated in zones 1,2,3
  - P_γ - residual dose averaged over entire shielding (use to compare beams only)
- 48-Ca is bounding beam

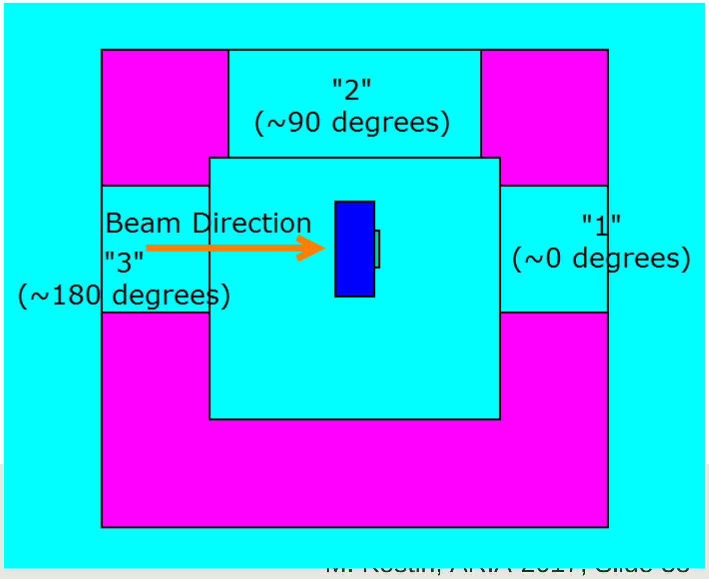

Low Power Charge Selector – Activity in Cooling Water

- 365 days or irradiation, 0 h and 4 h of decay (no 7-Be)
- To compare, 3-H in LCA at “1y/0h” = 8.36E-04 μCi/ml, 2.04E+04 μCi – can use LCA

0 h Decay

		Number of Atoms	Activity [micro-Ci]	AC [micro-Ci/ml]
N	16	3.00409E+06	7.89308E+00	3.49499E-02
O	15	3.97126E+07	6.08611E+00	2.69488E-02
F	17	2.09403E+06	6.08292E-01	2.69346E-03
N	13	1.78468E+07	5.59181E-01	2.47601E-03
H	3	3.41057E+12	1.64341E-01	7.27686E-04
B	12	8.52623E+01	7.90732E-02	3.50129E-04
C	15	4.13417E+03	3.16246E-02	1.40031E-04
N	17	7.04447E+03	3.16246E-02	1.40031E-04
C	11	2.06523E+06	3.16246E-02	1.40031E-04
N	18	5.26849E+02	1.58170E-02	7.00363E-05
F	16	9.16051E-18	1.50460E-02	6.66223E-05
C	14	7.58763E+11	7.90243E-05	3.49913E-07
Be	10	1.84558E+10	7.25576E-09	3.21279E-11
H	2	9.06042E+13	0.00000E+00	0.00000E+00
N	15	6.62123E+13	0.00000E+00	0.00000E+00
Li	6	9.22651E+10	0.00000E+00	0.00000E+00
Li	7	7.38287E+10	0.00000E+00	0.00000E+00
O	16	3.31467E+14	0.00000E+00	0.00000E+00
O	17	8.75198E+14	0.00000E+00	0.00000E+00
H	1	1.41706E+17	0.00000E+00	0.00000E+00
Be	9	1.38412E+12	0.00000E+00	0.00000E+00
N	14	7.27219E+12	0.00000E+00	0.00000E+00
O	18	5.85758E+11	0.00000E+00	0.00000E+00
He	4	3.20839E+14	0.00000E+00	0.00000E+00
B	10	3.69005E+10	0.00000E+00	0.00000E+00
B	11	6.82727E+11	0.00000E+00	0.00000E+00
He	3	4.00452E+11	0.00000E+00	0.00000E+00
C	12	1.71140E+14	0.00000E+00	0.00000E+00
Ne	20	1.84558E+10	0.00000E+00	0.00000E+00
C	13	1.29209E+14	0.00000E+00	0.00000E+00
Total			1.55159E+01	6.87030E-02

4 h Decay

		Number of Atoms	Activity [micro-Ci]	AC [micro-Ci/ml]
H	3	3.41048E+12	1.64336E-01	7.27668E-04
C	14	7.58763E+11	7.90243E-05	3.49913E-07
C	11	5.91161E+02	9.05232E-06	4.00829E-08
N	13	1.00342E+00	3.14395E-08	1.39211E-10
Be	10	1.84558E+10	7.25576E-09	3.21279E-11
O	15	1.37175E-28	2.10226E-35	9.30864E-38
F	17	1.27080E-61	3.69154E-68	1.63458E-70
He	3	4.00540E+11	0.00000E+00	0.00000E+00
N	14	7.27219E+12	0.00000E+00	0.00000E+00
He	4	3.20839E+14	0.00000E+00	0.00000E+00
N	15	6.62124E+13	0.00000E+00	0.00000E+00
Li	6	9.22651E+10	0.00000E+00	0.00000E+00
Li	7	7.38287E+10	0.00000E+00	0.00000E+00
O	16	3.31467E+14	0.00000E+00	0.00000E+00
O	17	8.75198E+14	0.00000E+00	0.00000E+00
Be	9	1.38412E+12	0.00000E+00	0.00000E+00
O	18	5.85758E+11	0.00000E+00	0.00000E+00
H	2	9.06042E+13	0.00000E+00	0.00000E+00
B	10	3.69005E+10	0.00000E+00	0.00000E+00
B	11	6.82729E+11	0.00000E+00	0.00000E+00
H	1	1.41706E+17	0.00000E+00	0.00000E+00
C	12	1.71140E+14	0.00000E+00	0.00000E+00
Ne	20	1.84558E+10	0.00000E+00	0.00000E+00
C	13	1.29209E+14	0.00000E+00	0.00000E+00
Total			1.64425E-01	7.28058E-04

Ground Water Activation at FS2 and BDS

- FRIB soil is similar to FNAL's
  - Most significant nuclides are ^{3}H and ^{22}Na (FNAL studies)
- For ground water we use the limits established by the Nuclear Regulatory Commission for effluent water (10 CFR 20)
  - Aquifer is quite deep
  - Closest drinking water well is more than a mile away

Groundwater – effluent	^{3}H Standard: 1,000 pCi/ml FRIB Design Goal: 20 pCi/ml (drinking water standard)	^{22}Na Standard: 6 pCi/ml FRIB Design Goal: 0.4 pCi/ml (drinking water standard)

- But the design goal is to stay below the drinking water limits set by EPA (40 CFR 141)
- Approach
  - Calculate the star density in soil (MARS15)
    - One operational year 5556 h and beam duty factor 5%
    - Soil is FNAL-type wet dirt, 2.24 g/cc (FRIB soil is similar – verified)
  - Convert star density into concentrations using Radionuclide Concentration Model

Ground Water Activation at FS2 and BDS
Radionuclide Concentration Model

$$C_i\,(t) = N_p \cdot S_{\max} \cdot G \cdot K_i \cdot L_i \,/\, (1.17 \times 10^6 \cdot \rho \cdot w_i)\,(1 - e^{\lambda_i t})$$

or for saturation:

C_i - concentration (*pCi/ml)* for nuclide of type *i*
N_p – number of incident protons per year
S_{max} – maximum start density in soil (from Monte-Carlo)
G - geometry factor to account for mixing of water in some volume
(in ‘classic’ model 0.19 for beam lines and 0.019 for target stations)
K_i – radionuclide production per star (0.075 atom/star for ^{3}H, 0.02 atom/star for ^{22}Na)
L_i – leachability factor (0.9 for ^{3}H and 0.135 for ^{22}Na)
ρ - soil density
w_i – weight of water divided by weight of soil needed to leach 90% of the leachable radioactivity that is present (0.27 for ^{3}H and 0.52 for ^{22}Na)
λ_i – inverse mean lifetime
1.17×10^6 – factor to convert disintegrations per second into pCi (0.037) and years into seconds (3.15×10^7)

- We do not rely on all the parameters in the ‘classic’ model
  - $S_{max} \times G$ is calculated in Monte-Carlo (averaged over “99%” and “99.99%” volumes)
  - K_i is also calculated in Monte-Carlo
  - Leaching factors are the most uncertain part of the model

Ground Water Activation at FS2 and BDS

- Previous studies for 1 W/m losses (FRIB-T10400-CA-000029-R002)

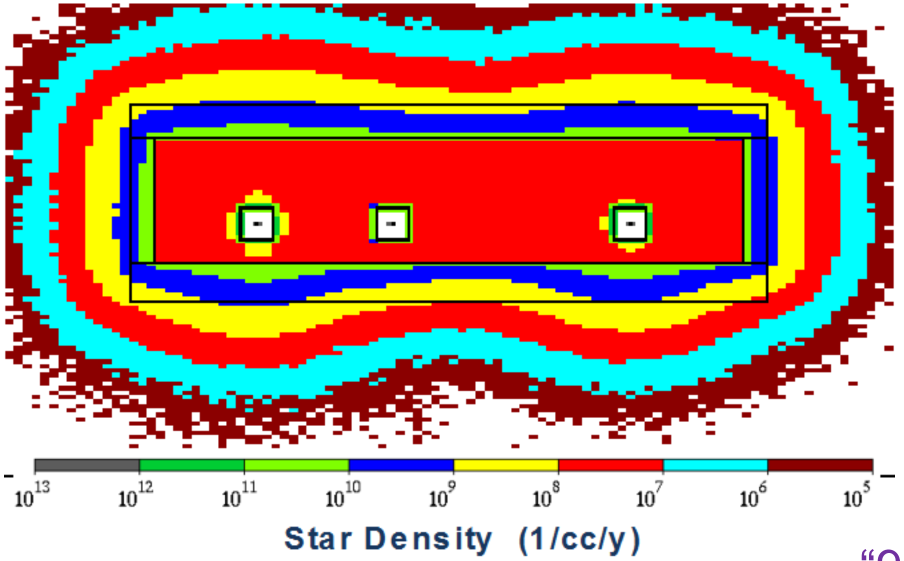

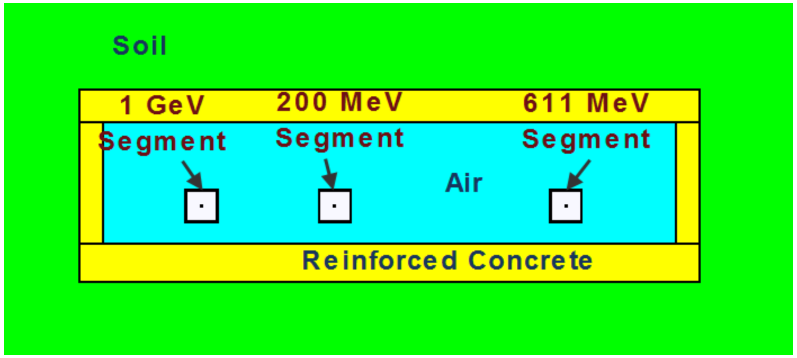

“99.9 % volume”

Irradiation 10 years			Irradiation 20 years			Saturation		
$C(^3H)$, pCi/ml	$C(^{22}Na)$, pCi/ml	$\Sigma_i\ C_i/C_{i,max}$	$C(^3H)$, pCi/ml	$C(^{22}Na)$, pCi/ml	$\Sigma_i\ C_i/C_{i,max}$	$C(^3H)$, pCi/ml	$C(^{22}Na)$, pCi/ml	$\Sigma_i\ C_i/C_{i,max}$
2.56	0.13	0.44	4.02	0.13	0.54	5.95	0.14	0.64

- Concentrations are compared to the limits for each nuclide individually and in sum

- $S_{max} \approx 10^9$ 1/cc/y (from distribution above)
  - At this S_{max}, requirements for drinking water standards are met (but barely)

(FS2/BDS) Residual Activation
Transition to Other Irradiation and Cooling Times

Matrix that shows relative levels of activation for Duratek steel for various irradiation and cooling times.

Cooling Time			Irradiation Time (day)				
	0.5	**1**	**5**	**30**	**100**	**365**	**7300**
1sec	2.93E+00	3.10E+00	3.51E+00	4.09E+00	4.57E+00	5.19E+00	5.85E+00
1min	2.67E+00	2.83E+00	3.23E+00	3.82E+00	4.30E+00	4.92E+00	5.58E+00
10min	2.12E+00	2.29E+00	2.68E+00	3.28E+00	3.75E+00	4.37E+00	5.04E+00
0.5hr	1.75E+00	1.91E+00	2.28E+00	2.89E+00	3.37E+00	3.99E+00	4.65E+00
1hr	1.44E+00	1.59E+00	1.94E+00	2.57E+00	3.04E+00	3.66E+00	4.33E+00
2hr	1.06E+00	1.20E+00	1.53E+00	2.17E+00	2.64E+00	3.27E+00	3.93E+00
4hr	6.28E-01	7.42E-01	1.05E+00	1.71E+00	2.16E+00	2.81E+00	3.48E+00
6hr	4.31E-01	5.33E-01	8.16E-01	1.48E+00	1.92E+00	2.57E+00	3.24E+00
12hr	1.67E-01	2.46E-01	4.91E-01	1.16E+00	1.58E+00	2.25E+00	2.92E+00
1day	7.90E-02	1.39E-01	3.42E-01	1.00E+00	1.40E+00	2.08E+00	2.75E+00
2days	4.94E-02	9.20E-02	2.61E-01	8.73E-01	1.26E+00	1.95E+00	2.61E+00
7days	2.24E-02	4.37E-02	1.50E-01	5.98E-01	9.50E-01	1.63E+00	2.28E+00
30d	6.00E-03	1.19E-02	5.04E-02	2.53E-01	5.17E-01	1.14E+00	1.76E+00
0.5yr	1.36E-03	2.72E-03	1.32E-02	7.72E-02	2.05E-01	5.92E-01	1.04E+00
1yr	7.60E-04	1.52E-03	7.45E-03	4.38E-02	1.22E-01	3.65E-01	6.66E-01
2yr	3.17E-04	6.34E-04	3.12E-03	1.84E-02	5.21E-02	1.59E-01	3.01E-01
5yr	3.06E-05	6.11E-05	3.01E-04	1.78E-03	5.11E-03	1.59E-02	3.83E-02
10yr	2.14E-06	4.28E-06	2.13E-05	1.27E-04	4.01E-04	1.38E-03	8.02E-03
20yr	6.26E-07	1.25E-06	6.25E-06	3.74E-05	1.23E-04	4.41E-04	3.51E-03
30yr	3.60E-07	7.21E-07	3.60E-06	2.16E-05	7.13E-05	2.58E-04	2.33E-03

- Dose rate after 30 days or irradiation, 1 day of cooling, on contact (“30 days/1 day/0 cm”) – numerically similar to “100 days/4 hours/30 cm”
- “5 days/4 hours/30 cm” is similar to “30 days/1 day/0 cm” (from matrix)

Ion beams at FRIB

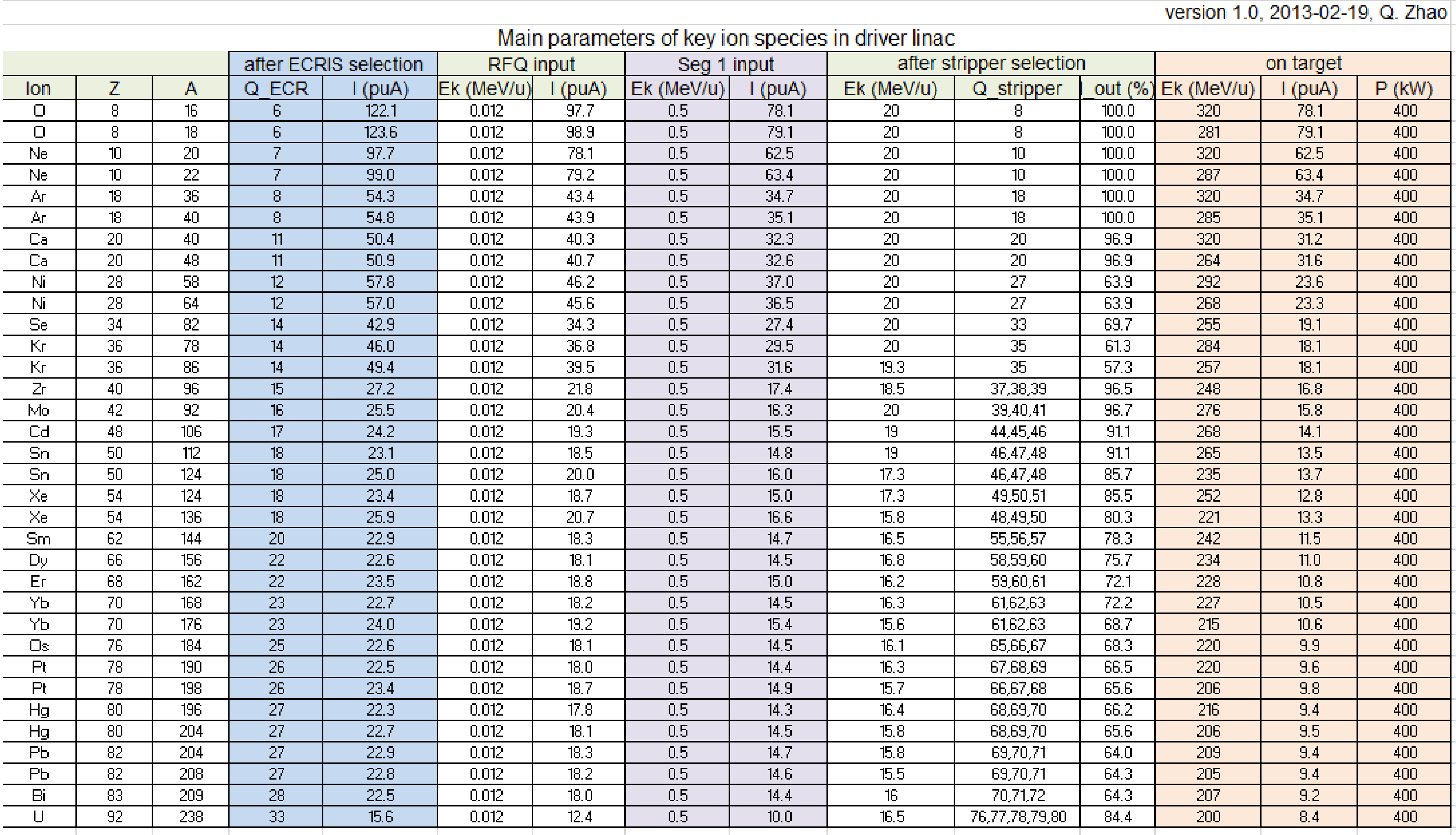

version 1.0, 2013-02-19, Q. Zhao

Main parameters of key ion species in driver linac

			after ECRIS selection		RFQ input		Seg 1 input		after stripper selection			on target		
Ion	Z	A	Q_ECR	I (puA)	Ek (MeV/u)	I (puA)	Ek (MeV/u)	I (puA)	Ek (MeV/u)	Q_stripper	I_out (%)	Ek (MeV/u)	I (puA)	P (kW)
O	8	16	6	122.1	0.012	97.7	0.5	78.1	20	8	100.0	320	78.1	400
O	8	18	6	123.6	0.012	98.9	0.5	79.1	20	8	100.0	281	79.1	400
Ne	10	20	7	97.7	0.012	78.1	0.5	62.5	20	10	100.0	320	62.5	400
Ne	10	22	7	99.0	0.012	79.2	0.5	63.4	20	10	100.0	287	63.4	400
Ar	18	36	8	54.3	0.012	43.4	0.5	34.7	20	18	100.0	320	34.7	400
Ar	18	40	8	54.8	0.012	43.9	0.5	35.1	20	18	100.0	285	35.1	400
Ca	20	40	11	50.4	0.012	40.3	0.5	32.3	20	20	96.9	320	31.2	400
Ca	20	48	11	50.9	0.012	40.7	0.5	32.6	20	20	96.9	264	31.6	400
Ni	28	58	12	57.8	0.012	46.2	0.5	37.0	20	27	63.9	292	23.6	400
Ni	28	64	12	57.0	0.012	45.6	0.5	36.5	20	27	63.9	268	23.3	400
Se	34	82	14	42.9	0.012	34.3	0.5	27.4	20	33	69.7	255	19.1	400
Kr	36	78	14	46.0	0.012	36.8	0.5	29.5	20	35	61.3	284	18.1	400
Kr	36	86	14	49.4	0.012	39.5	0.5	31.6	19.3	35	57.3	257	18.1	400
Zr	40	96	15	27.2	0.012	21.8	0.5	17.4	18.5	37,38,39	96.5	248	16.8	400
Mo	42	92	16	25.5	0.012	20.4	0.5	16.3	20	39,40,41	96.7	276	15.8	400
Cd	48	106	17	24.2	0.012	19.3	0.5	15.5	19	44,45,46	91.1	268	14.1	400
Sn	50	112	18	23.1	0.012	18.5	0.5	14.8	19	46,47,48	91.1	265	13.5	400
Sn	50	124	18	25.0	0.012	20.0	0.5	16.0	17.3	46,47,48	85.7	235	13.7	400
Xe	54	124	18	23.4	0.012	18.7	0.5	15.0	17.3	49,50,51	85.5	252	12.8	400
Xe	54	136	18	25.9	0.012	20.7	0.5	16.6	15.8	48,49,50	80.3	221	13.3	400
Sm	62	144	20	22.9	0.012	18.3	0.5	14.7	16.5	55,56,57	78.3	242	11.5	400
Dy	66	156	22	22.6	0.012	18.1	0.5	14.5	16.8	58,59,60	75.7	234	11.0	400
Er	68	162	22	23.5	0.012	18.8	0.5	15.0	16.2	59,60,61	72.1	228	10.8	400
Yb	70	168	23	22.7	0.012	18.2	0.5	14.5	16.3	61,62,63	72.2	227	10.5	400
Yb	70	176	23	24.0	0.012	19.2	0.5	15.4	15.6	61,62,63	68.7	215	10.6	400
Os	76	184	25	22.6	0.012	18.1	0.5	14.5	16.1	65,66,67	68.3	220	9.9	400
Pt	78	190	26	22.5	0.012	18.0	0.5	14.4	16.3	67,68,69	66.5	220	9.6	400
Pt	78	198	26	23.4	0.012	18.7	0.5	14.9	15.7	66,67,68	65.6	206	9.8	400
Hg	80	196	27	22.3	0.012	17.8	0.5	14.3	16.4	68,69,70	66.2	216	9.4	400
Hg	80	204	27	22.7	0.012	18.1	0.5	14.5	15.8	68,69,70	65.6	206	9.5	400
Pb	82	204	27	22.9	0.012	18.3	0.5	14.7	15.8	69,70,71	64.0	209	9.4	400
Pb	82	208	27	22.8	0.012	18.2	0.5	14.6	15.5	69,70,71	64.3	205	9.4	400
Bi	83	209	28	22.5	0.012	18.0	0.5	14.4	16	70,71,72	64.3	207	9.2	400
U	92	238	33	15.6	0.012	12.4	0.5	10.0	16.5	76,77,78,79,80	84.4	200	8.4	400

NRC License Application

Limits Requested in NRC License Application (Will Change)

Byproduct, source, and/or special nuclear material	**Chemical and/or physical form**	**Maximum Amount possessed at any one time under this license**
A. Any byproduct material with Atomic Nos. between 1-83; inclusive	A. Sealed sources, foils, electroplated materials and target materials	A. No single source to exceed 5 millicuries. Total not to exceed 50 millicuries.
B. Any byproduct material with Atomic Nos. between 84-108; inclusive	B. Sealed sources, foils, electroplated materials and target materials	B. No single source to exceed 200 microcuries. Total possession not to exceed 1 millicurie.
C. Thorium-228	C. Sealed sources, foils, and electroplated materials	C. No single source to exceed 10 microcuries. Total possession not to exceed 2 millicuries.
D. Thorium-228	D. Thorium Nitrate	D. 2 millicuries
E. Americium-241/Beryllium	E. Sealed source (Eckert & Ziegler A3036-1 capsule)	E. Not to exceed 1.0 millicurie
F. Americium-241/Beryllium	F. Sealed source (AEA Technology QSA Inc. (formerly Amersham) Model X.3)	F. Not to exceed 1.0 Curie
G. Americium-241/Beryllium	G. Sealed source (Gammatron/NSSI Model No. DA-5)	G. Not to exceed 5.0 Curies
H. Cesium-137	H. Sealed source (JL Shepherd Model 6810)	H. 200 millicuries
I. Any byproduct material with Atomic Nos. between 1-83; inclusive	I. Incidentally activated products	I. Not to exceed 100 millicuries per radionuclide and 5 curies total.
J. Calcium-47	J. Incidentally activated product	J. 200 millicuries
K. Krypton-76	K. Incidentally activated product	K. 200 millicuries
L. Copper-64	L. Incidentally activated product	L. 200 millicuries